ZZJG VALVE MORE VALUE

ZZJG VALVE

TOTAL SOLUTIONS FOR FLOW SYSTEM

ZHENGZHOU JINGGONG TECHNOLOGY CO., LTD.

Tel: +86-371-55659925
Fax: +86-371-55659926
Email: info@zzjgvalve.com
Web: www.zzjgvalve.com
Address: Chuangye Road, Gaoshan Town, Zhengzhou City, China 450000

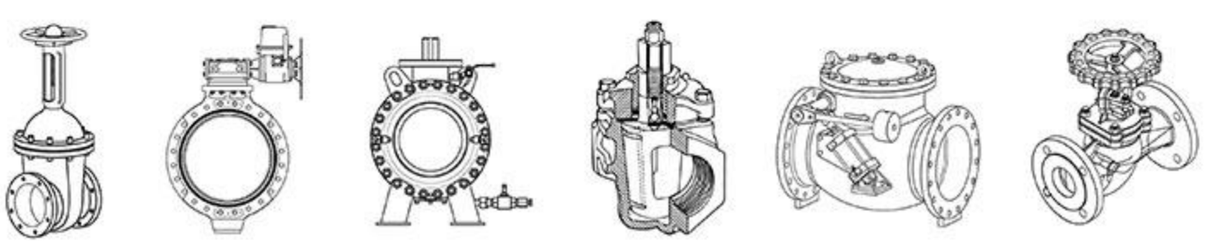

ABOUT US

ZZJG VALVE

ZHENGZHOU JINGGONG TECHNOLOGY CO., LTD is located in "Hometown of Valve in China" Gaoshan Town, Xingyang City, Henan Province. It is a high-tech enterprise in one line of design, manufacturing, sales and services.

Founded in 1981, after more than 40 years of development, it has become a professional valve manufacturer. With 103,180,000 RMB of registered capital, it covers an area of 26,000 ㎡ and owns professional workshops.

Aim: loyal to and customer, optimal management, rigorous and pragmatic and to promote China's valve industry to a higher level and ZZJG brand a leading position.

Certifications: ISO9001 Quality System Certification, ISO14001 Environment System Certification, ISO45001 Occupational Health and Safety Management Certification, TS Special Equipment License, API 6D, API 609, European Union CE Certification, etc.

Main products: PN0.25-32MPa, DN50-3000, soft/metal seal butterfly valves, plug valves, ball valves, gate valves, globe valves, check valves, control valves, etc.

Application: Water engineering, Electric power, Petroleum, Chemical industry, Petrochemical industry, Heating, Pharmaceuticals, Metallurgy, etc.

www.zzjgvalve.com

PRODUCTION WORKSHOP

The company strictly controls and checks the quality of every link and process. Product design has been incorporated into a set of extremely rigorous and precise procedures; from design, material selection, manufacturing, assembly to operation, every link must undergo rigorous testing procedures, strict control, and high quality, so that customers can use it. At the same time, we deeply feel our rigorous and pragmatic quality purpose.

ZZJG VALVE

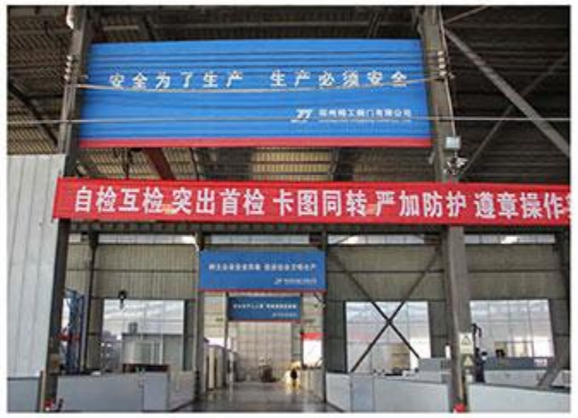

www.zzjgvalve.com

HONORS & QUALIFICATIONS

ZZJG VALVE


中华人民共和国
特种设备生产许可证
Production License of Special Equipment
People's Republic of China

编号：TS2741152-2027

单位名称：郑州精工阀门有限公司
住　　所：荥阳市高山镇创业路中段
制造地址：河南省郑州市荥阳市高山镇创业路中段

经审查，获准从事以下特种设备生产活动：

许可项目	许可子项目	许可参数	备注
压力管道元件制造	压力管道阀门（金属阀门）A1	-	具体产品应按型式试验证书

发证机关：河南省市场监督管理局
发证日期：2023年5月11日
有效期：2023年5月11日 至2027年5月10日

www.zzjgvalve.com

ZZJG VALVE

ZZJG VALVE

PROCESSING SITE

The company has a technology research and development center and a product processing center. Under the framework of a strict and complete quality management system, the stability and reliability of each product is ensured through sophisticated CNC equipment, mature process flow and superb processing skills.

www.zzjgvalve.com

ZZJG VALVE

ZZJG VALVE

QUALITY ASSURANCE

With the rapid development of science and technology and the continuous improvement of industrial level, higher requirements have been put forward for product mechanical performance and safety standards. The company continues to increase investment in product research and development and quality standards, achieving full-process quality control from raw material testing, production processes, products and applications, providing a better guarantee for corporate innovation and quality.

www.zzjgvalve.com

PRODUCT SCENE

Main products we design and produce: PN0.25-32MPa, DN50-3000, soft seal butterfly valves, metal seal butterfly valves, plug valves, eccentric half ball valves, gate valves, globe valves, micro-resistance slow-closing butterfly check valves, cam-slide line blind valves, telescopic devices, hydraulic control valves, etc.

ENGINEERING SITE

Always adhere to flexible and diverse marketing strategies, actively carry out customer-centered marketing work, and implement regional sales strategies. The mature and strict quality management system ensures efficient and standardized operation from product manufacturing to sales. The professional technical team and after-sales service have been praised by domestic and foreign merchants.






ZZJG VALVE



www.zzjgvalve.com

ZZJG VALVE

ZZJG VALVE

ENGINEERING SITE










www.zzjgvalve.com

ZZJG VALVE

ZZJG VALVE

INDUSTRY APPLICATION

Product application range: water conservancy engineering, urban water supply and drainage, sewage treatment, electric power, petroleum, natural gas, chemical industry, heating, pharmaceuticals, metallurgy, etc.

Metallurgy

Natural Gas

Electric Power

Chemical Industry

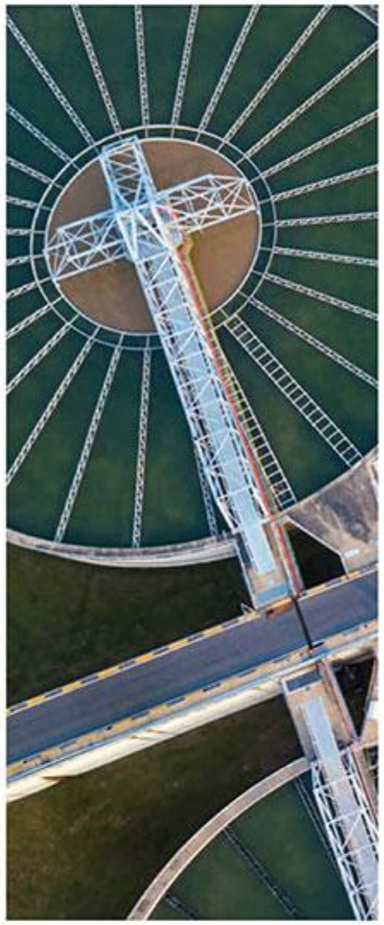

Water Engineering

Petroleum

www.zzjgvalve.com

CONTENTS

Butterfly Valve

Plug Valve

Ball Valve

Gate Valve

Globe Valve

Control Valve

Check Valve

Butterfly Valve

Concentric Soft Seal Butterfly Valve

Double Offset Butterfly Valve

Metal Seal Triple Offset Butterfly Valve

Metal Seal Quadruple Offset Butterfly Valve

Rotary Butterfly Valve

Concentric Soft Seal Butterfly Valve

Overview

Concentric Soft Seal Butterfly Valve also can be called Centerline Soft Seal Butterfly Valve. Concentric soft seal butterfly valves are the preferred conventional butterfly valves sandwiched between two pipe flanges for a short distance.

Features

1. The flow resistance coefficient is small and the flow characteristics tend to be linear.
2. Light weight, easy to install, small opening and closing torque.
3. It has a two-way sealing function and is not restricted by the flow direction of the medium during installation.
4. Simple structure, easy to disassemble and maintain, easy to open and close at 90° operation.
5. The valve body is lined with rubber, and the surface of the valve plate is sprayed with epoxy resin or the valve body and valve plate are fully lined with rubber, which has excellent anti-corrosion performance.
6. Epoxy resin and rubber comply with the hygiene standard GB/T 17219-19. (Standard for Hygienic Safety Evaluation of Equipment and Protective Materials in Drinking Water)

Applications

It can be used to regulate and intercept corrosive and non-corrosive gases, liquids, semi-fluids and solid powder pipelines and containers in petrochemical, food, pharmaceutical, paper-making, hydro-power, shipping, water supply and drainage, smelting and other systems. It can be installed in any position.






Sealing test 1.1*PN Shell test 1.5*PN

Technical Performance Specifications			
Nominal pressure (MPa)	0.6	1	1.6
Nominal diameter (mm)	50-1800	50-1600	50-1000
Sealing test (MPa)	0.66	1.1	1.76
Shell test (MPa)	0.9	1.5	2.4
Applicable medium	Water, oil, gas and corrosive media		
Applicable temperature	0℃~150℃		
Operation	lever, gear, pneumatic, electric, hydraulic		
Connecting type	Wafer Lug Flange		
Installation	Vertical installation, horizontal installation		

ZZJG VALVE

Main Parts Materials	
Part	Material
Body	HT200, QT450-10WCB, stainless steel
Stem	stainless steel / ANSI 1045
Plate	QT450-10, WCB, stainless steel
Seat	NBR, EPDM, FPM

Main Design & Manufacturing Standards		
Design standard	GB/T12238-2008	Flanged and wafer resilient seal butterfly valves
Flange standard	GB/T17241.6-2008	Integral cast iron flanges
	GB/T9115	Steel pipe welding neck flanges
Structure length standard	GB/T12221-2005	Metal valves - Face to face, end to end, center to face and center to end dimensions
	ISO 5752:1982	Metal valves for use in flanged pipe systems - Face-to-face and center-to-face dimensions,MOD
Pressure test standard	GB/T13927-2008	Industrial valves - Pressure testing

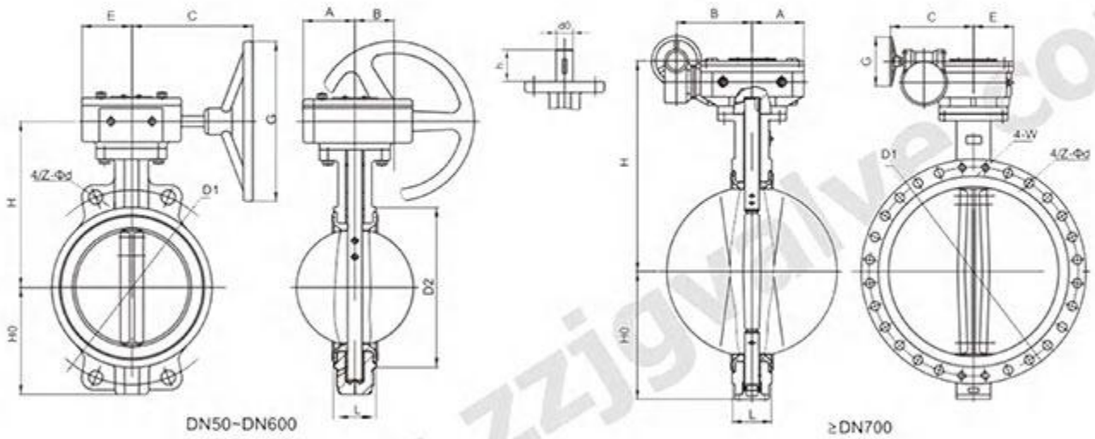

D371X-10/16C DN50-DN1200 NPS2"~48"																													
DN	L	1.0MPa											DN	L	1.6MPa														
		Flange Size			Dimension										Flange Size			Dimension											
		D1	D2	z-Φd	4-W	HO	H	A	B	C	E	G			DI	D2	z-Φd	4-W	HO	H	A	B	C	E	G				
50	43	125	102	4-Φ18	-	73	145	52	45	150	52	150	50	43	125	102	4-Φ18	-	73	145	52	45	150	52	150				
65	46	145	122	8-Φ18	-	80	152	52	45	150	52	150	65	46	145	122	8-Φ18	-	80	152	52	45	150	52	150				
80	46	160	138	8-Φ18	-	88	159	52	45	150	52	150	80	46	160	138	8-Φ18	-	88	159	52	45	150	52	150				
100	52	180	158	8-Φ18	-	103	179	52	45	150	52	150	100	52	180	158	8-Φ18	-	103	179	52	45	150	52	150				
125	56	210	188	8-Φ18	-	116	192	52	45	150	52	150	125	56	210	188	8-Φ18	-	116	192	52	45	150	52	150				
150	56	240	212	8-Φ22	-	138	208	52	45	150	52	150	150	56	240	212	8-Φ22	-	138	208	52	45	150	52	150				
200	60	295	268	8-Φ22	-	162	240	75	63	300	75	300	200	60	295	268	12-Φ22	-	162	240	75	63	300	75	300				
250	68	350	320	12-Φ22	-	202	284	75	63	300	75	300	250	68	355	320	12-Φ26	-	202	284	75	63	300	75	300				
300	78	400	370	12-Φ22	-	222	315	81	80	300	81	300	300	78	410	378	12-Φ26	-	222	315	81	80	300	81	300				
350	78	460	430	16-Φ22	-	270	355	81	80	300	81	300	350	78	470	438	16-Φ26	-	270	355	81	80	300	81	300				
400	102	515	482	16-Φ26	-	321	424	121	178	300	115	300	400	102	525	490	16-Φ30	-	321	424	121	178	300	115	300				
450	114	565	532	20-Φ26	-	349	495	121	178	300	115	300	450	114	585	550	20-Φ30	-	349	495	121	178	300	115	300				
500	127	620	585	20-Φ26	-	387	472	121	178	300	115	300	500	127	650	610	20-Φ33	-	387	472	121	178	300	115	300				
600	154	725	685	20-Φ30	-	463	558	145	304	300	144	300	600	154	770	725	20-Φ36	-	463	558	145	304	300	144	300				
700	165	840	800	24-Φ30	-	510	795	157	255	165	189	400	700	165	840	795	24-Φ36	-	524	786	157	255	165	189	400				
800	190	950	905	24-Φ33	-	577	848	157	255	165	189	400	800	190	950	900	24-Φ39	-	608	832	157	255	165	189	400				
900	200	1050	1005	24-Φ33	4-M30	656	1004	185	265	370	220	400	900	200	1050	1000	24-Φ39	4-M36	656	1004	185	265	370	220	400				
1000	251	1160	1110	24-Φ36	4-M33	711	1086	185	265	370	185	435	1000	251	1170	1115	24-Φ42	4-M39	800	1084	185	265	370	185	435				
1200	276	1380	1330	38-Φ39	4-M36	864	1332	453	709	600	280	480	1200	276	1390	1330	28-Φ48	4-M45	864	1332	453	709	600	280	480				

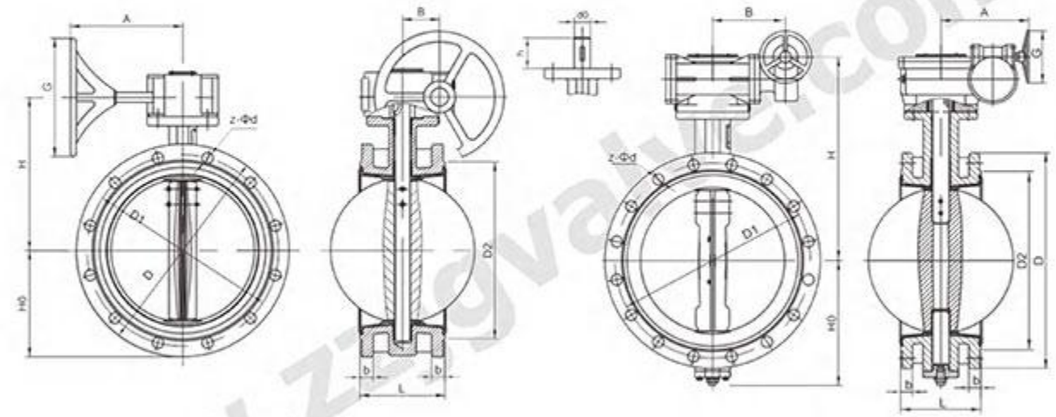

D341X-10/16C DN50~DN1200 NPS2"~48"																													
DN	L	1.0MPa											DN	L	1.6MPa														
		Flange Size					Dimensions								Flange Size					Dimensions									
		D	D1	D2	b	z-Φd	HO	H	A	B	G				D	D1	D2	b	z-Φd	HO	H	A	B	G					
50	108	165	125	102	18	4-Φ18	83	152	154	45	150	50	108	165	125	102	18	4-Φ18	83	152	154	45	150						
65	112	185	145	122	18	8-018	93	162	154	45	150	65	112	185	145	122	18	8-Φ18	93	162	154	45	150						
80	114	200	160	138	20	8-Φ18	100	177	154	45	150	80	114	200	160	138	20	8-Φ18	100	177	154	45	150						
100	127	220	180	158	20	8-018	114	187	154	45	150	100	127	220	180	158	20	8-Φ18	114	187	154	45	150						
125	140	250	210	188	22	8-Φ18	122	207	154	45	150	125	140	250	210	188	22	8-Φ18	122	207	154	45	150						
150	140	285	240	212	22	8-022	143	222	154	45	150	150	140	285	240	212	22	8-Φ22	143	222	154	45	150						
200	152	340	295	268	24	8-Φ22	170	245	250	63	300	200	152	340	295	268	24	12-Φ22	170	245	250	63	300						
250	165	395	350	320	26	12-Φ22	198	275	250	63	300	250	165	405	355	320	26	12-Φ26	198	275	250	63	300						
300	178	445	400	370	26	12-Φ22	222	320	227	80	300	300	178	460	410	378	28	12-Φ26	222	320	227	80	300						
350	190	505	460	430	26	16-Φ22	267	350	227	80	300	350	190	520	470	438	30	16-Φ26	267	350	227	80	300						
400	216	565	515	482	26	16-Φ26	278	469	278	178	300	400	216	580	525	490	32	16-Φ30	278	469	278	178	300						
450	222	615	565	532	28	20-Φ26	320	504	278	178	300	450	222	640	585	550	40	20-Φ30	320	504	278	178	300						
500	229	670	620	585	28	20-Φ26	329	559	278	178	300	500	229	715	650	610	44	20-Φ33	329	559	278	178	300						
600	267	780	725	685	34	20-Φ30	384	645	200	304	300	600	267	840	770	725	54	20-Φ36	384	645	200	304	300						
700	292	895	840	800	34	24-Φ30	450	726	244	327	400	700	292	910	840	795	40	24-Φ36	450	726	244	327	400						
800	318	1015	950	905	36	24-Φ33	501	786	244	327	400	800	318	1025	950	900	42	24-Φ39	501	786	244	327	400						
900	330	1115	1050	1005	38	28-Φ33	550	969	270	411	400	900	330	1125	1050	1000	44	28-Φ39	550	969	270	411	400						
1000	410	1230	1160	1110	38	28-Φ36	622	1019	418	455	435	1000	410	1255	1170	1115	46	28-Φ42	622	1019	418	455	435						
1200	470	1455	1380	1330	44	32-Φ39	763	1309	600	709	480	1200	470	1485	1390	1330	52	32-Φ48	763	1309	600	709	480						

Double Offset Butterfly Valve

Overview

Double Offset Butterfly Valve's main structure is similar to butterfly valve, with the characteristics of short structure and small size of butterfly valve, so it can manufacture large-caliber, extra-large caliber and super-large caliber valves;

The valve combines the functions and benefits of butterfly valves, half ball valves, gate valves and globe valves, and has its own completely different powerful functions and benefits.

Small size, light weight, convenient transportation, installation, maintenance and repair, reliable operation and a series of advantages, has become a major technological revolution in the valve industry.

Features

It can not only be reliably shut down in the forward pressure, but also reliably shut down in the reverse pressure or the reverse pressure is much greater than the forward pressure.

On the two sealing surfaces of the sealing pair, advanced processes such as overlay welding, ether laser sputtering, vacuum protection seepage overlay welding and other advanced processes can be used to form gradient functional materials such as martensitic stainless steel, austenitic stainless steel, cemented carbide, cermet, synthetic diamond and so on according to different hardness request

It can automatically align the center, and can automatically cross the range to compensate for wear;

Make full use of the energy of the medium in the valve when closing, and automatically apply extremely high sealing specific pressure, so that the high hard sealing pair can achieve reliable zero leakage.

Instant closing, instant opening, no friction between the sealing pairs.

Applications

It is widely used in metallurgy, mining, petrochemical, chemical, electric power, environmental protection, municipal and other industries and departments of pipeline opening and closing, regulation. Applicable medium: water, sewage, oil, etc.






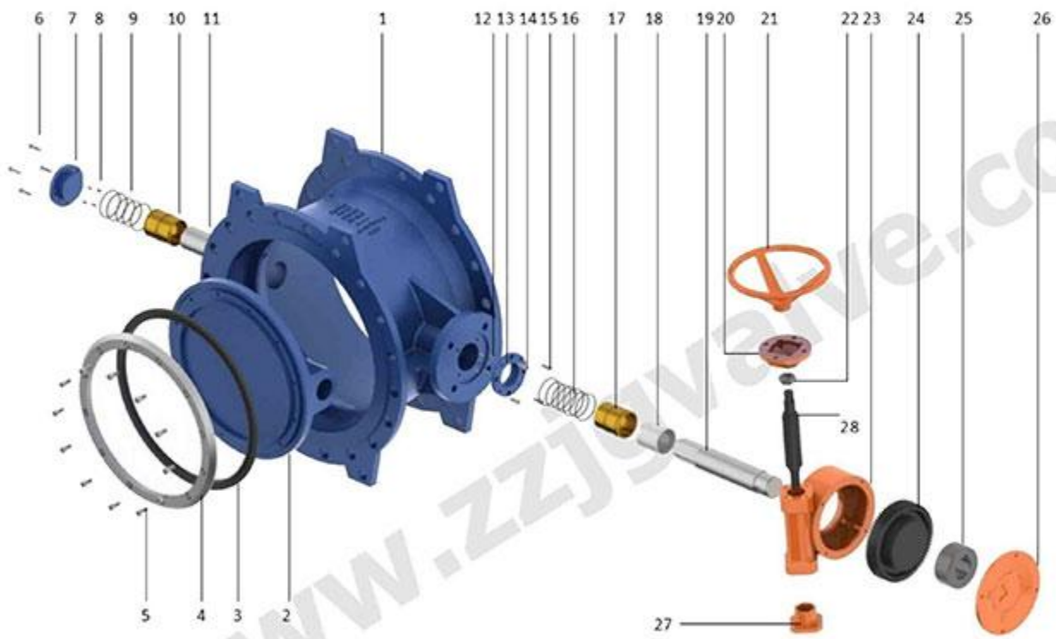

No.	Part	No.	Part	No.	Part	No.	Part
1	Body	8	Bolts	15	Bolts	22	Hexagon Nut
2	Disc	9	Spring	16	Spring	23	Gearbox Body
3	Disc Sealing	10	Bushing	17	Bushing	24	Gear
4	Retaining Ring	11	Lower Shaft	18	Main Shaft Bearing	25	Inner Gear Shaft Connection
5	Retaining Ring Bolts	12	Bolts	19	Main Shaft	26	Gearbox Cover
6	Bolts	13	Main Shaft Cover	20	Gearbox ISO Top Flange	27	Gearbox Shaft Cover
7	Lower Shaft Cover	14	Bolts	21	Hand Wheel	28	Gearbox Shaft

Sealing test 1.1*PN Shell test 1.5*PN

Technical Performance Specifications

Nominal diameter (mm)	Nominal pressure (Mpa)	Test pressure (MPa)		Applicable temperature	Applicable medium
		Shell test	Sealing test		
DN50~3000mm	0.6	0.9	0.66	0~80℃ 0~200℃	clean water sewage oil etc.
	1.0	1.5	1.1		
	1.6	2.4	1.76		
	2.5	3.75	2.76		
	4.0	6.0	4.4		

Main Design & Manufacturing Standards

Standard content	Standard	Standard name
Flange standard	GB/T 9113	Integral steel pipe flanges (PN designated)
	GB/T 17241.6	Integral cast iron flanges (PN designated)
	HG/T 20592	Steel pipe flanges (PN designated)
	HG/T 20615	Steel pipe flanges (Class designated)
	HG/T 20623	Large diameter steel pipe flanges (Class designated)
	ASME B16.47	Large Diameter Steel Flanges NPS 26 Through NPS 60 Metric /Inch Standard
	ASME B16.5	Pipe Flanges and Flanged Fittings NPS 1/2 Through NPS 24 Metric/Inch Standard
Structure length standard	GB/T 12221	Metal valves - Face to face, end to end, center toface and center to end dimensions
	ISO 5752:1982	Metal valves for use in flanged pipe systems Face-to-face and center-to-face dimensions, MOD
	API 609	Butterfly Valves: Double-flanged, Lugand Wafer-type, and Butt-welding Ends
Pressure test standard	GB/T 13927	Industrial valves - Pressure testing
	ISO 5208:2015	Industrial valves - Pressure testing of metallic valves, MOD
	API 598	Valve Inspection and Testing
Structural design standard	GB/ T 26146	General valve - Eccentric semi-ball valve
	GB/T 12238	General valves - Flange and wafer connection butterfly valves
Use material standard	GB/T 12226	General purpose industrial valves - Specification of flake graphite iron castings
	GB/T 12227	General purpose industrial valves - Specification of spheroidal graphite iron castings
	GB/T 12229	General purpose industrial valves - Specification of carbon steel castings
	GB/T 12230	General purpose industrial valves - Specification of stainless steel castings
	ASTM A351	Standard Specification for Castings, Austenitic, for Pressure-Containing Parts
	ASTM A216	Standard Specification for Steel Castings, Carbon, Suitable for Fusion Welding, for High-Temperature Service

Operation

Main types: The main types of this valve include manual, worm gear, electric, pneumatic, and hydraulic. Among them, pneumatic valves and hydraulic valves are

Working Principle

The valve seat adopts the DBB (single piston effect) sealing principle, the sealing surface of the spool is a cubic curved surface, and the sealing surface of the valve seat is a primary conical surface. At the sealing point, the seat face is actually a slice of the cubic surface of the spool, so the combination is perfect.

It has the function of adapting (automatic positioning and overlapping of the center) and compensating for wear, because the center of rotation deviates from the geometric center of the spool, there is the actual effect of the spool entity constantly retreating and shrinking inward when the spool is opened, and the spool entity continues to advance and expands outward when the spool is closed, and its function is equivalent to the synthesis of hemispherical valves, gate valves, globe valves, and butterfly valves.

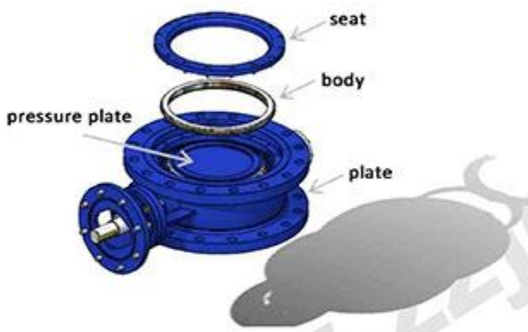

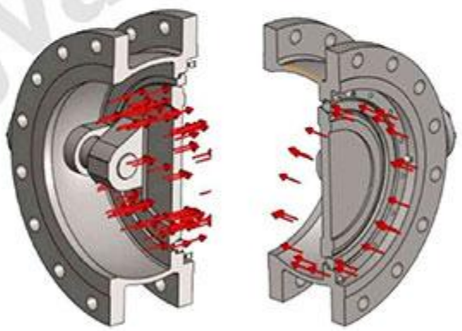

reverse pressure forward pressure

The main function of the bidirectional flow valve is to seal well both at forward pressure and when reverse pressure or reverse pressure is greater than forward pressure.

When the forward pressure acts, the medium pressure pushes the valve plate to move forward, the valve stem is deformed, and the sealing surface of the valve plate transmits pressure close to the sealing surface of the valve seat, and pushes the valve seat to the valve body step to make it dense and good.

When the reverse pressure acts, the medium pressure pushes the valve plate to move backwards, the valve stem is deformed, and the medium pressure simultaneously pushes the valve seat sealing surface to close to the valve plate sealing surface to transmit pressure, and pushes the valve seat to the valve plate deformation position to make it sealed well.

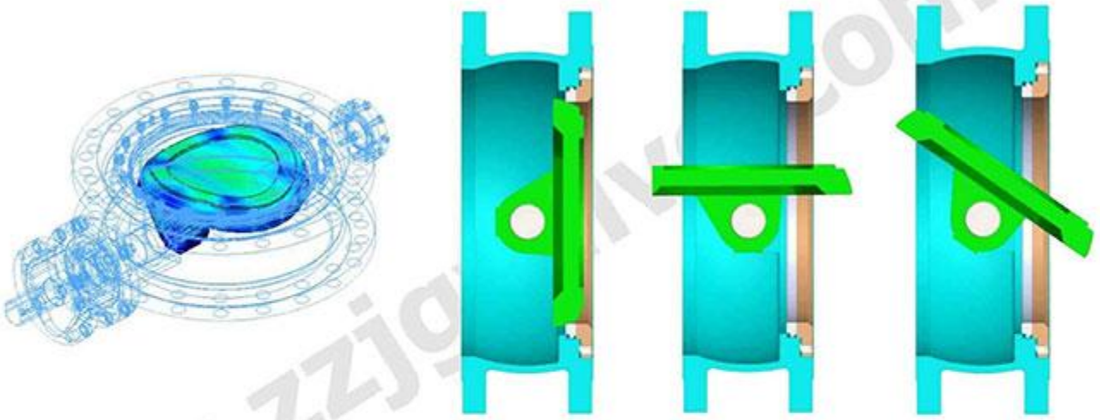

changes in different angles of valve opening

Double offset butterfly valve Dimensions (<80℃)

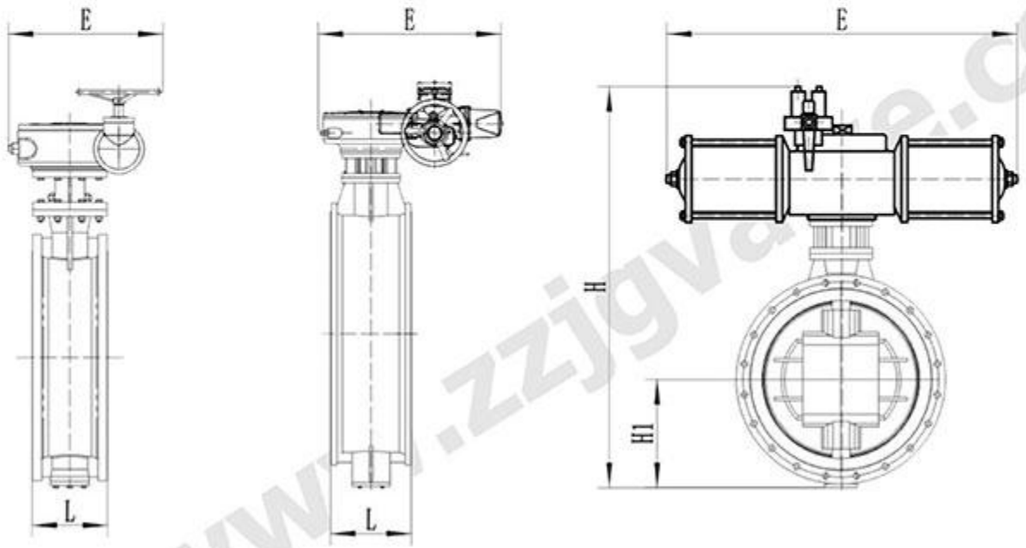

High temperature double offset butterfly valve dimensions (<425℃)

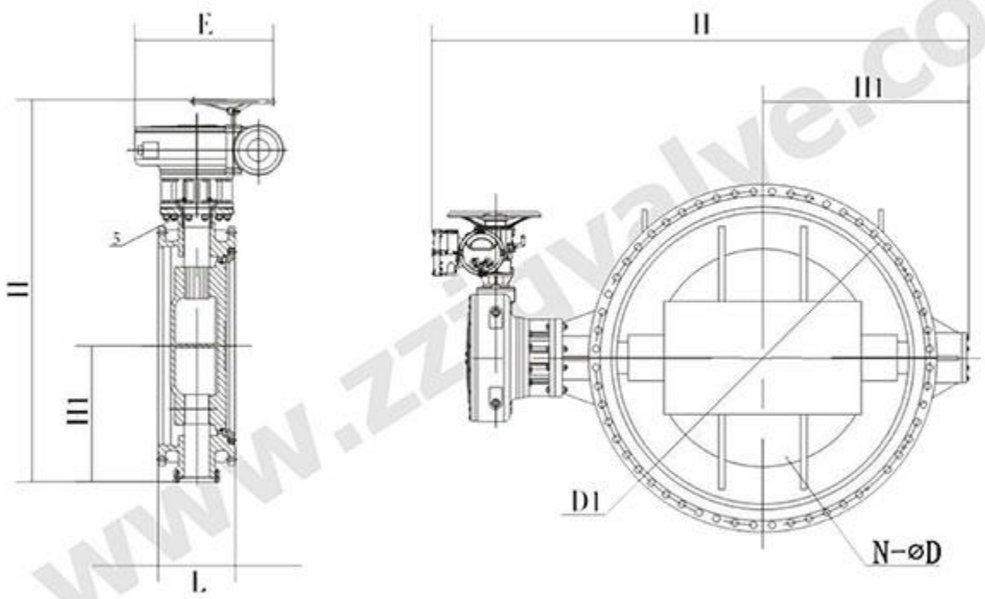

ZZJG VALVE

Double Offset Butterfly Valve

DN	L	H1	E			H		
			Worm gear	pneumatic	electric	Worm gear	pneumatic	electric
100	127	150	200	355	255	420	675	600
125	140	170	200	355	255	460	715	640
150	140	210	280	355	315	550	800	705
200	152	245	425	250	315	760	850	775
250	165	276	425	250	315	830	925	945
300	178	280	560	450	315	895	1035	1070
350	190	325	560	450	315	950	1070	1140
400	216	345	580	450	315	1190	1190	1210
450	222	390	580	650	714	1255	1250	1335
500	229	442	580	650	714	1305	1290	1415
600	267	505	660	850	810	1340	1455	1605
700	292	550	550	850	810	1520	1585	1844
800	318	605	550	1250	810	1710	1700	2040
900	330	665	550	1250	863	1810	1965	2255
1000	410	710	750	1250	863	1960	2015	2380
1200	470	835	925	12S0	863	2250	250	2640
1400	530	935	925	1250	1055	2434	2550	2866
1600	600	1060	925	1250	1055	2780	2750	3156
1800	670	1175	980	1250	1183	3020	2950	3421
2000	760	1265	980	1500	1286	3270	3350	3685

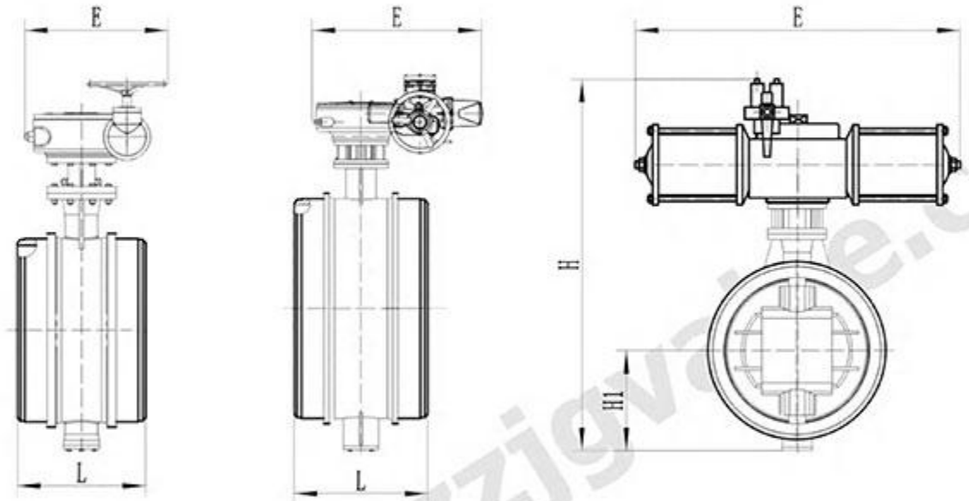

Main Dimensions of Welded Double Offset Butterfly Valve

Nominal diameter (mm)		L	H1	H		
DN	NPS	PN6/PN10/PN16/PN25/PN40 CLass150/CLass300		Worm gear	pneumatic	electric
100	4	190	120	376	630	555
125	5	200	130	386	640	565
150	6	210	140	452	696	602
200	8	230	180	530	740	650
250	10	250	230	620	790	740
300	12	270	240	698	838	850
350	14	290	270	778	900	970
400	16	310	300	846	930	1010
450	18	330	340	1005	998	1082
500	20	350	360	1058	1045	1175
600	24	390	410	1195	1235	1410
700	28	430	510	1308	1390	1650
800	32	470	560	1505	1500	1830
900	36	510	620	1650	1810	2240
1000	40	550	670	1718	1860	2320
1200	48	630	780	2015	-	2406
1400	56	710	880	2265	-	2660
1600	64	790	1020	2547	-	2895

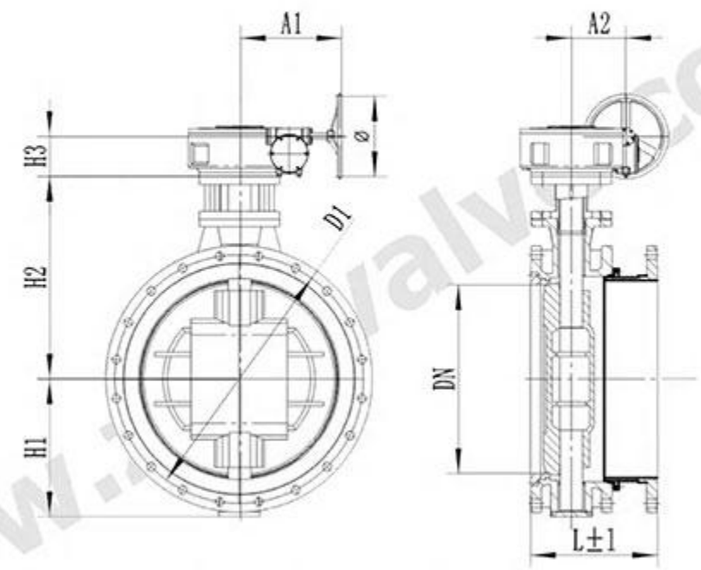

DQ342H-2.5/6/10/16 Flange Telescopic Double Offset Butterfly Valve Connection Dimensions

DN	L	move	HI	H2	H3	A1	A2	Φ	0.25MPa		0.6MPa		1.0MPa		1.6MPa	
		ΔL							D1	n-d	D1	n-d	D1	n-d	D1	n-d
50	150	±10	82.5	150	66	135	42	150	110	4-Φ14	110	4-Φ14	125	4-Φ19	125	4-Φ19
65	170	±10	92.5	165	66	135	42	150	130	4-Φ14	130	4-Φ14	145	4-Φ19	145	4-Φ19
80	180	±10	100	170	66	135	42	150	150	4-Φ19	150	4-Φ19	160	8-Φ19	160	8-Φ19
100	190	±10	125	195	11	135	42	180	170	4-Φ19	170	4-Φ19	180	8-Φ19	180	8-Φ19
125	200	±10	142	220	77	135	42	180	200	8-Φ19	200	8-Φ19	210	8-Φ19	210	8-Φ19
150	210	±10	160	250	77	135	42	320	225	8-Φ19	225	8-Φ19	240	8-Φ23	240	8-Φ23
200	230	±12	190	275	107	202	60	320	280	8-Φ19	280	8-Φ19	295	8-Φ23	295	12-Φ23
250	250	±12	220	305	107	202	60	320	335	12-Φ19	335	12-Φ19	350	12-Φ23	355	12-Φ28
300	270	±15	245	350	126	220	93	320	395	12-Φ23	395	12-Φ23	400	12-Φ23	410	12-Φ28
350	290	±15	278	385	126	220	93	320	445	12-Φ23	445	12-Φ23	460	16-Φ23	470	16-Φ28
400	310	±15	305	435	157	287	123	400	495	16-Φ23	495	16-Φ23	515	16-Φ28	525	16-Φ31
450	330	±15	346	490	157	287	123	400	550	16-Φ23	550	15-Φ23	565	20-Φ28	585	20-Φ31
500	350	±20	375	505	165	360	184	390	600	20-Φ23	600	20-Φ23	620	20-Φ28	650	20-Φ34
600	390	±20	425	605	165	360	184	390	705	20-Φ26	705	20-Φ26	725	20-Φ31	770	20-Φ37
700	430	±20	495	675	195	410	204	500	810	24-Φ26	810	2-Φ26	840	24-Φ31	840	24-Φ37
800	470	±30	560	740	195	410	204	500	920	24-Φ31	920	24-Φ31	950	24-Φ34	950	24-Φ40
900	510	±30	625	805	235	521	217	500	1020	24-Φ31	1020	24-Φ31	1050	28-Φ34	1050	28-Φ40
1000	550	±30	680	865	235	521	217	500	1120	28-Φ31	1120	28-Φ31	1160	28-Φ37	1170	28-Φ43
1200	630	±35	800	1065	251	501	290	630	1320	32-Φ31	1340	32-Φ34	1380	32-Φ40	1390	32-Φ49
1400	710	±35	920	1207	343	656	312	800	1520	36-Φ31	1560	36-Φ37	1590	36-Φ43	1590	36-Φ49
1600	790	±40	1030	1317	370	750	414	800	1730	40-Φ31	1760	40-Φ37	1820	40-Φ49	1820	40-Φ56
1800	870	±40	1245	1457	470	800	440	900	1930	44-Φ31	1970	44-Φ40	2020	44-Φ48	2020	44-Φ56
2000	950	±50	1290	1625	470	800	440	900	2130	48-Φ30	2180	48-Φ43	2230	48-Φ48	2230	48-Φ62
2200	1000	±50	1450	1740	470	800	440	900	2340	52-Φ33	2390	52-Φ43	2440	52-Φ56	2440	52-Φ62
2400	1100	±50	1675	1875	480	990	595	1000	2540	56-Φ33	2600	56-Φ43	2650	56-Φ56	2650	56-Φ62
2600	1200	±50	1745	2010	480	990	595	1000	2740	60-Φ33	2810	60-Φ48	2850	60-Φ55	2850	60-d62
2800	1300	±50	1818	2100	480	990	595	1000	2950	64-Φ36	3020	64-Φ48	3070	64-Φ56	3070	64-Φ70
3000	1400	±50	1910	2200	480	990	595	1000	3160	68-Φ36	3220	68-Φ48	3290	68-Φ62	3300	68-Φ70

Metal Seal Butterfly Valve (Triple Offset)

Overview

It is a high-performance valve developed by our company to solve the problem that the three offset butterfly valve cannot achieve two-way zero leakage.

The sealing structure has been fundamentally changed, and the sealing effect is mainly achieved by relying on the sealing specific pressure generated by the torsional extrusion of the sealing auxiliary hair.

When the medium flows forward and reverse, the sealing pair acts under the dual action of torsional sealing pressure and part of the medium pressure, so that the valve can achieve two-way zero leakage, high temperature and high pressure resistance, and wear resistance, thereby extending the service life of the valve.

Applications






Sealing test 1.1*PN Shell test 1.5*PN

Technical Performance Specifications					
Nominal diameter (mm)	Nominal pressure (Mpa)	Test pressure (Mpa)		Applicable temperature	Applicable medium
		Shell test	Sealing test		
50~3000	0.6	0.9	0.66	0~80°C 0~200°C 0-400 °C	clean water sewage oil etc.
	1.0	1.5	1.1		
	1.6	2.4	1.76		
	2.5	3.75	2.76		
	4.0	6.0	4.4		
	4.0	6.0	4.4		
	6.4	9.6	7.04		
	10.0	15.0	11.0		
50-3000	Class 150	3.0	2.2		
	Class 300	7.5	5.5		
50-1000	Class 600	16.5	12.1		
	Class 900	22.5	16.5		
	Class 1500	37.5	27.5		

Main Parts Materials	
Part name	Material name or code
Body	Ductile iron, WCB, carbon steel, CF8, CF3, CF8M, CF3M
Plate	WCB, Q235, CF8, CF3, CF8M, CF3M
Stem	20Cr13, 304, 316, 17-4PH
Seat	13Cr, stainless steel, carbide, STL

Metal Seal Butterfly Valve (Triple Offset)

Main Design & Manufacturing Standards		
Standard content	Standard	Standard name
Flange standard	GB/T 9113	Integral steel pipe flanges (PN designated)
	GB/T 17241.6	Integral cast iron flanges (PN designated)
	HG/T 20592	Steel pipe flanges (PN designated)
	HG/T 20615	Steel pipe flanges (Class designated)
	HG/T 20623	Large diameter steel pipe flanges (Class designated)
	ASME B16.47	Large Diameter Steel Flanges NPS 26 Through NPS 60 Metric /Inch Standard
	ASME B16.5	Pipe Flanges and Flanged Fittings NPS 1/2 Through NPS 24 Metric/Inch Standard
Structure length standard	GB/T 12221	Metal valves - Face to face, end to end, center toface and center to end dimensions
	ISO 5752:1982	Metal valves for use in flanged pipe systems Face-to-face and center-to-face dimensions, MOD
	API 609	Butterfly Valves: Double-flanged, Lugand Wafer-type, and Butt-welding Ends
Pressure test standard	GB/T 13927	Industrial valves - Pressure testing
	ISO 5208:2015	Industrial valves - Pressure testing of metallic valves, MOD
	API 598	Valve Inspection and Testing
Structural design standard	GB/ T 26146	General valve - Eccentric semi-ball valve
	GB/T 12238	General valves - Flange and wafer connection butterfly valves
Use material standard	GB/T 12226	General purpose industrial valves - Specification of flake graphite iron castings
	GB/T 12227	General purpose industrial valves - Specification of spheroidal graphite iron castings
	GB/T 12229	General purpose industrial valves - Specification of carbon steel castings
	GB/T 12230	General purpose industrial valves - Specification of stainless steel castings
	ASTM A351	Standard Specification for Castings, Austenitic, for Pressure-Containing Parts
	ASTM A216	Standard Specification for Steel Castings, Carbon, Suitable for Fusion Welding, for High-Temperature Service

Operation

Main types: The main types of this valve include manual, worm gear, electric, pneumatic, and hydraulic. Among them, pneumatic valves and hydraulic valves are suitable for pressure air and pressure liquid sources.

Working Principle

Triple Offset Design

Offset 1 - The valve shaft is located behind the valve seat shaft, allowing the seal to fully surround and contact the entire valve seat.

Offset 2 - The centerline of the valve shaft is offset from the centerline of the pipe and valve, which prevents interference from the opening and closing of the valve.

Offset 3 - The valve seat cone axis is offset from the centerline of the valve shaft, which eliminates friction during closing and opening and achieves a uniform compression seal around the entire valve seat.

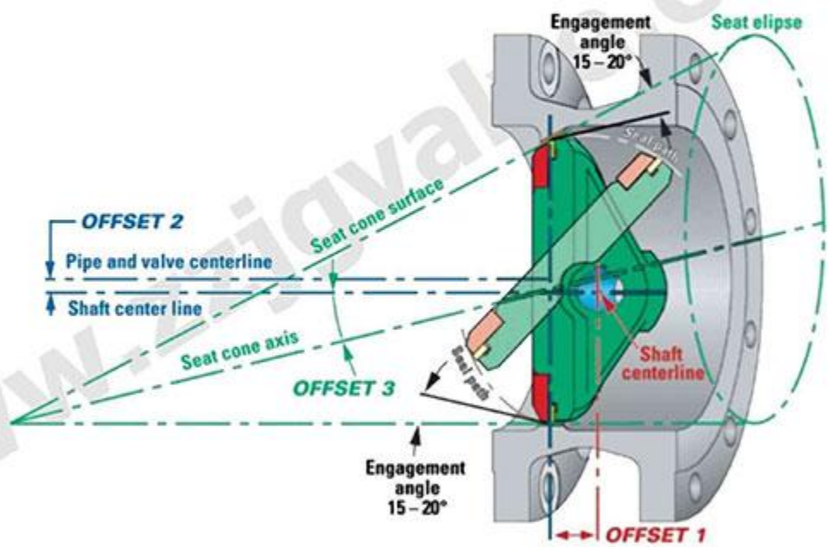

Metal Seal Butterfly Valve (Triple Offset)

Structural features

Laminated butterfly plate seal

The torque during closing creates a seat force that acts uniformly around the entire circumference. The elastic seal flexes and energizes, maintaining the shape of the valve seat. Compression force acts evenly along the circumference, allowing the valve to achieve tight closing in both directions. The elasticity of the seal allows the valve body and butterfly plate to contact or expand, avoiding the risk of clogging due to temperature fluctuations. This device is able to adjust its alignment on its own.

Features

1. Triple offset design for sealing zero leakage.
2. Bi-directional flowing medium & metal-to-metal sealing.
3. Laminated disc seal: The elastic seal is curved and energetic, achieve tight closing in both directions. Self-aligning: expand due to temperature fluctuations.
4. High quality sealing effect & longer service life.
5. Small installation dimension, small opening/closing torque, small fluid resistance.
6. Small fluid resistance, small installation dimension, small opening/closing torque.
7. Range of working temperature: -45℃~538℃.

Laminated sealing ring

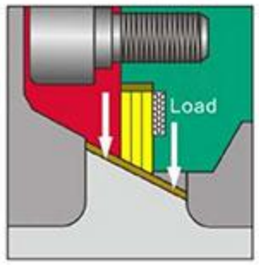

The lamellar elastic butterfly plate sealing ring can withstand high temperatures of 538°C and is assembled with one to six flexible graphite plates sandwiched between thin stainless steel rings. The flexible graphite sealing ring is not glued to the stainless steel ring and therefore can withstand higher temperatures.

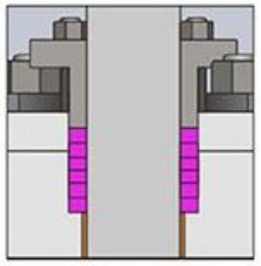

Low emission valve shaft seal 0-20ppm valve shaft polishing degree is 8RMS, packing chamber outer diameter polishing degree is 32RMS. Dynamic loads are available to extend maintenance-free life. Filling adjustments are easy to make.

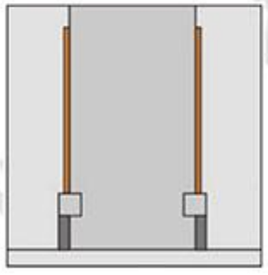

Stem blow-out protection: Dual valve shaft blow-out protection, compliant with AP1609 standard.

Metal Seal Butterfly Valve (Triple Offset)

Basic Configuration Cross-section Diagram			
No.	Name	Valve body material	Valve body stainless steel material
1a	Body	ASTM A216 WCB/EN10213 1.0619	ASTM A351 CF8M/EN102131.4408
2a	Disc	ASTM A216 WCB/EN10213 1.0619	ASTM A351 CF8M/EN102131.4408
2b	Plate pressure ring	ASTM A276 420	ASTM A182 Type F316ZEN10222-51.4401
2c	Screw	UNS S31600	UNS S31600
3a	Sealing ring	ASTM A182 Type F304/EN10222-T5	ASTM A182 Type F316/EN10222-51.4401
3b	Graphite gasket	UNS S31600+石墨	UNS S31600+石墨
4a	Upper Stem	UNS S17400(17-4PH)	UNS S17400(17-4PH)
4b	Pin	UNS S17400(17-4PH)	UNS S17400(17-4PH)
4c	Lower stem	UNS S17400(17-4PH)	UNS S17400(17-4PH)
4d	Pin	UNS S17400(17-4PH)	UNS S17400(17-4PH)
5a	Double-end stud	ISO3506 A4(AISI 316)	ISO3506 A4(AISI 316)
5b	Nut	UNS S31600	UNS S31600
5c	Packing gland	ASTM A216 WCB/EN102131.0619	ASTM A351 CF8M/EN102131.4408
5d	Packing	Graphite	Graphite
5e	Packing ring	UNS S31600	UNS S31600
5f	Upper shaft sleeve	UNS S31600+H60	UNS S31600+H60
5h	Cock	UNS S31600	UNS S31600
6a	Bottom flange	A105	ASTM A182 Type F316/EN10222-51.4401
6b	Screw	UNS S31600	UNS S31600
6c	Winding graphite gasket	UNS S31600+石墨	UNS S31600+石墨
7a	Locking ring	UNS S31600	UNS S31600
7b	Lower shaft sleeve	UNS S31600+H60	UNS S31600+H60
7C	Block	A105	UNS S31600
7d	Thrust bearing	A105	UNS S31600
7e	Thrust bearing gasket	A105	UNS S31600
8a	Seat ring	ASTM A182 Type F304/EN10222-T5	ASTM A182 Type F316/EN10222-51.4401
8b	Seat surface hardening treatment	Stellite* gr.21	Stellite* gr.21
8C	Graphite gasket	UNS S31600+石墨	UNS S31600+石墨
9a	Bracket	ASTM A216 WCB/EN10213 1.0619	ASTM A216 WCB/EN102131.0619
9b	Screw	UNS S31600	UNS S31600
10a	Ring	ASTM A276 420	ASTM A182 Type F316ZEN10222-51.4401
10b	Bolt	UNS S31600	UNS S31600

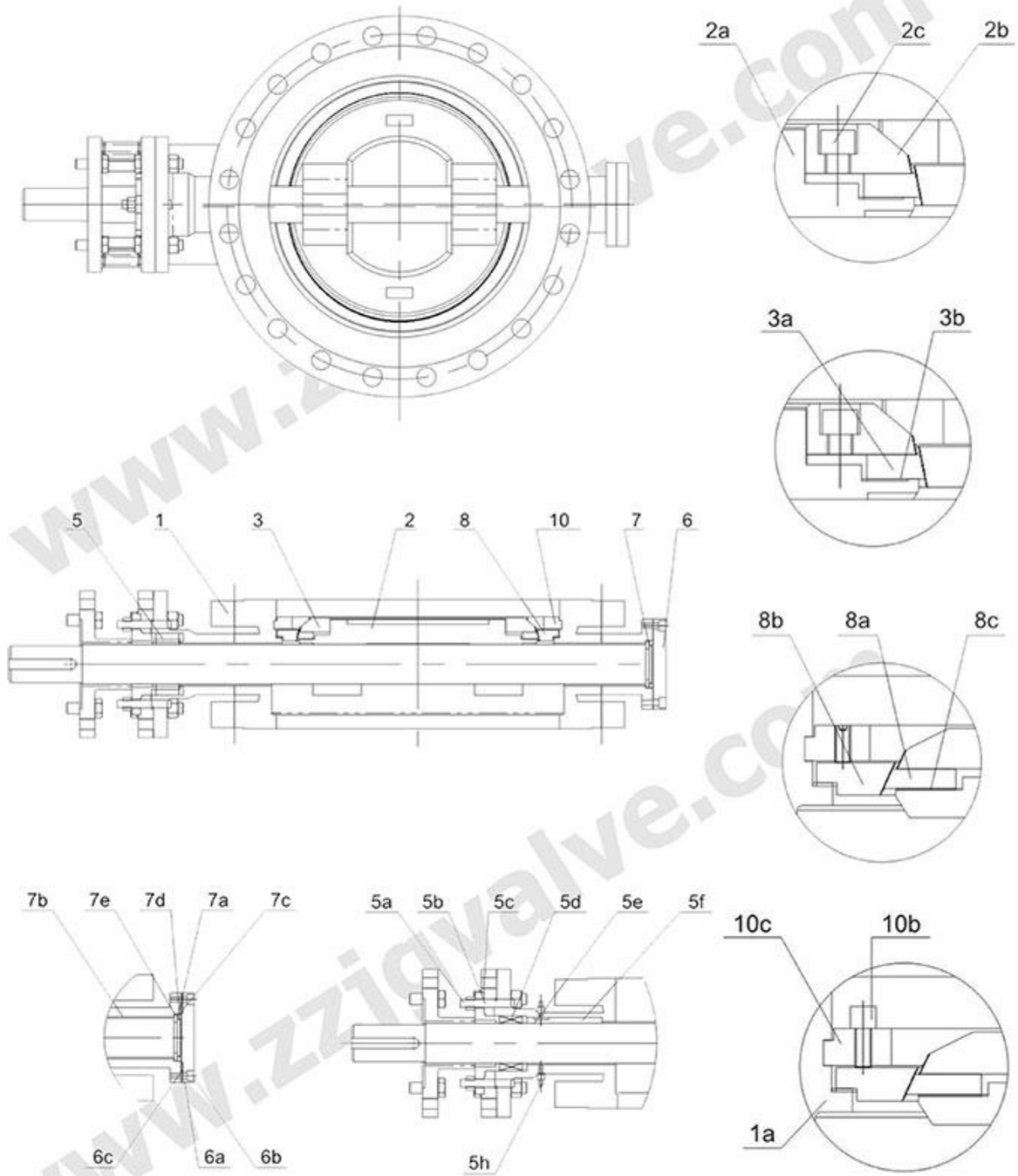

Metal Seal Butterfly Valve (Triple Offset)

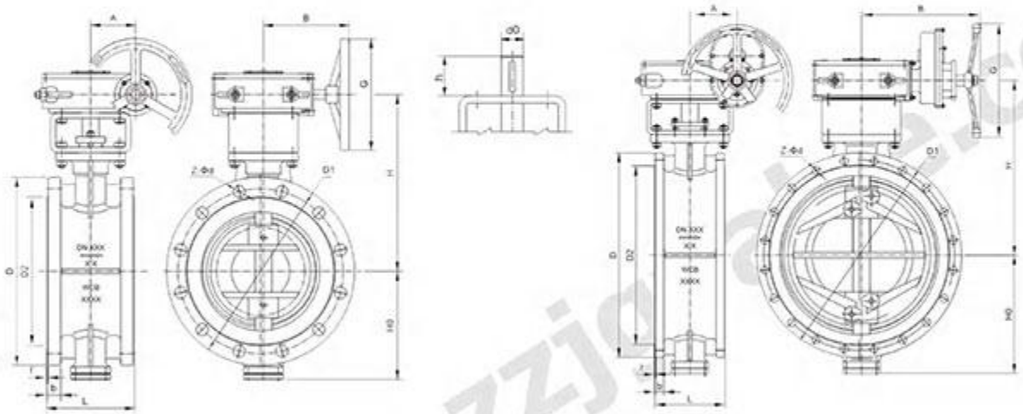

Type:D343H-10/16C DN50～DN2000 NPS2”～80”																							
DN	L	1.0MPa											1.6MPa										
		Flange Size						Dimension					Flange Size						Dimension				
		D	D1	D2	f	b	Z-Φd	H0	H	A	B	G	D	D1	D2	f	b	Z-Φd	H0	H	A	B	G
50	108	165	125	102	3	18	4-Φ18	82.5	195	50	144	180	165	125	102	3	18	4-Φ18	82.5	195	50	144	180
65	112	185	145	122	3	18	8-Φ18	92.5	215	50	144	180	185	145	122	3	18	8-Φ18	92.5	215	50	144	180
80	114	200	160	138	3	20	8-Φ18	100	215	50	144	180	200	160	138	3	20	8-Φ18	100	215	50	144	180
100	127	220	180	158	3	20	8-Φ18	110	235	50	144	180	220	180	158	3	20	8-Φ18	110	235	50	144	180
125	140	250	210	188	3	22	8-Φ18	125	290	63	200	300	250	210	188	3	22	8-Φ18	125	290	63	200	300
150	140	285	240	212	3	22	8-Φ22	180	310	63	200	300	285	240	212	3	22	8-Φ22	180	310	63	200	300
200	152	340	295	268	3	24	8-Φ22	202	360	63	200	300	340	295	268	3	24	12-Φ22	202	360	63	200	300
250	165	395	350	320	3	26	12-Φ22	235	395	80	230	350	405	355	320	3	26	12-Φ26	235	395	80	230	350
300	178	445	400	370	4	26	12-Φ22	265	425	80	230	350	460	410	378	4	28	12-Φ26	265	425	80	230	350
350	190	505	460	430	4	26	16-Φ22	305	475	125	260	400	520	470	438	4	30	16-Φ26	305	475	125	260	400
400	216	565	515	482	4	26	16-Φ26	335	520	125	260	400	580	525	490	4	32	16-Φ30	335	520	125	260	400
450	222	615	565	532	4	28	20-Φ26	365	550	125	260	400	640	585	550	4	40	20-Φ30	365	550	125	260	400
500	229	670	620	585	4	28	20-Φ26	405	610	125	370	400	715	650	610	4	44	20-Φ33	405	610	125	370	400
600	267	780	725	685	5	34	20-Φ30	450	655	160	398	500	840	770	725	5	54	20-Φ36	445	685	160	398	500
700	292	895	840	800	5	34	24-Φ30	520	725	160	398	500	910	840	795	5	40	24-Φ36	520	725	200	418	600
800	318	1015	950	905	5	36	24-Φ33	605	795	200	418	600	1025	950	900	5	42	24-Φ39	605	795	200	418	600
900	330	1115	1050	1005	5	38	28-Φ33	655	885	200	418	700	1125	1050	1000	5	44	28-Φ39	655	885	263	510	700
1000	410	1230	1160	1110	5	38	28-Φ36	715	950	200	418	700	1255	1170	1115	5	46	28-Φ42	715	950	263	510	700
1200	470	1455	1380	1330	5	44	32-Φ39	840	1125	263	510	700	1485	1390	1330	5	52	32-Φ48	840	1125	333	550	800
1400	530	1675	1590	1535	5	48	36-Φ42	980	1275	333	550	800	1685	1590	1530	5	58	36-Φ48	980	1275	333	550	800
1600	600	1915	1820	1760	5	52	40-Φ48	1125	1470	333	550	800	1930	1820	1750	5	64	40-Φ56	1125	1470	374	590	900
1800	670	2115	2020	1960	5	56	44-Φ48	1240	1585	374	590	900	2130	2020	1950	5	68	44-Φ56	1240	1585	374	590	900
2000	760	2325	2230	2170	5	60	48-Φ48	1380	1720	374	590	900	2345	2230	2150	5	70	48-Φ62	1380	1720	453	635	1000

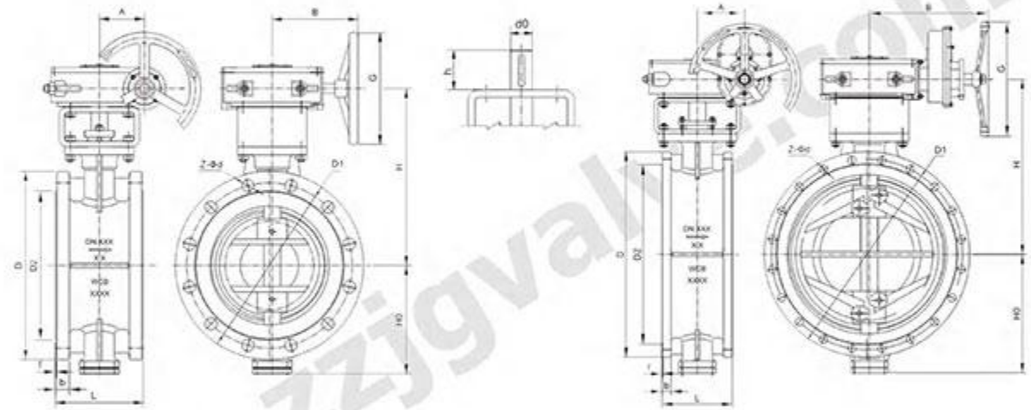

Type:D343H-25/40C DN50～DN1600 NPS2”～64”																									
DN	L	2.5MPa												4.0MPa											
		Flange Size							Dimension					Flange Size							Dimension				
		D	D1	D2	f	b	z-Φd	Z-W	H0	H	A	B	G	D	D1	D2	f	b	z-Φd	Z-W	H0	H	A	B	G
50	108	165	125	102	3	20	4-Φ18	-	82.5	195	50	144	180	165	125	102	3	20	4-Φ18	-	82.5	195	50	144	180
65	112	185	145	122	3	22	8-Φ18	-	92.5	215	50	144	180	185	145	122	3	22	8-Φ18	-	92.5	210	50	144	180
80	114	200	160	138	3	24	8-Φ18	-	100	215	50	144	180	200	160	138	3	24	8-Φ18	-	100	230	50	144	180
100	127	235	190	162	3	24	8-Φ22	-	118	235	50	144	180	235	190	162	3	24	8-Φ22	-	118	250	50	144	180
125	140	270	220	188	3	26	8-Φ26	-	135	290	63	200	300	270	220	188	3	26	8-Φ26	-	135	295	63	200	300
150	140	300	250	218	3	28	8-Φ26	-	180	310	63	200	300	300	250	218	3	28	8-Φ26	-	215	340	80	230	350
200	152	360	310	278	3	30	8-Φ26	4-M24	185	370	80	230	350	375	320	285	3	34	12-Φ30	-	220	390	80	230	350
250	165	425	370	335	3	32	8-Φ30	4-M27	215	397	80	230	350	450	385	345	3	38	8-Φ33	4-M30	265	485	125	260	400
300	178	485	430	395	4	34	12-Φ30	4-M27	250	455	125	260	400	515	450	310	4	42	12-Φ33	4-M30	290	490	125	260	400
350	190	555	490	450	4	38	12-Φ33	4-M30	285	495	125	260	400	580	510	465	4	46	12-Φ36	4-M33	310	540	125	370	400
400	216	620	550	505	4	40	12-Φ36	4-M33	330	535	125	370	400	660	585	535	4	50	12-Φ39	4-M36	340	620	160	398	500
450	222	670	600	555	4	46	16-Φ36	4-M33	345	560	125	370	400	685	610	560	4	57	16-Φ39	4-M36	390	645	200	418	600
500	229	730	660	615	4	48	16-Φ36	4-M33	390	620	160	398	500	755	670	615	4	57	16-Φ42	4-M39	415	670	200	418	600
600	267	845	770	720	5	58	16-Φ39	4-M36	445	685	200	418	600	890	795	735	5	72	16-Φ48	4-M45	500	740	200	418	600
700	292	960	875	820	5	50	20-Φ42	4-M39	545	750	200	418	600	995	900	840	5	64	20-Φ48	4-M45	580	900	263	510	700
800	318	1085	990	930	5	54	20-Φ48	4-M45	625	870	263	510	700	1140	1030	960	5	72	20-Φ56	4-M52	665	975	333	550	800
900	330	1185	1090	1030	5	58	24-Φ48	4-M45	685	965	263	510	700	1250	1140	1070	5	76	24-Φ56	4-M52	690	1010	333	550	800
1000	410	1320	1210	1140	5	62	24-Φ56	4-M52	755	1040	263	510	700	1360	1250	1180	5	80	24-Φ56	4-M52	755	1090	333	550	800
1200	470	1530	1420	1350	5	70	28-Φ56	4-M52	860	1180	333	550	800	1575	1460	1380	5	88	28-Φ62	4-M56	950	1365	374	590	900
1400	530	1755	1640	1560	5	76	32-Φ62	4-M56	1020	1365	374	590	900	1795	1680	1600	5	98	32-Φ62	4-M56	1090	1475	453	635	1000
1600	600	1975	1860	1780	5	84	36-Φ62	4-M56	1190	1580	374	590	900	-	-	-	-	-	-	-	-	-	-	-	-

Metal Seal Butterfly Valve (Triple Offset)

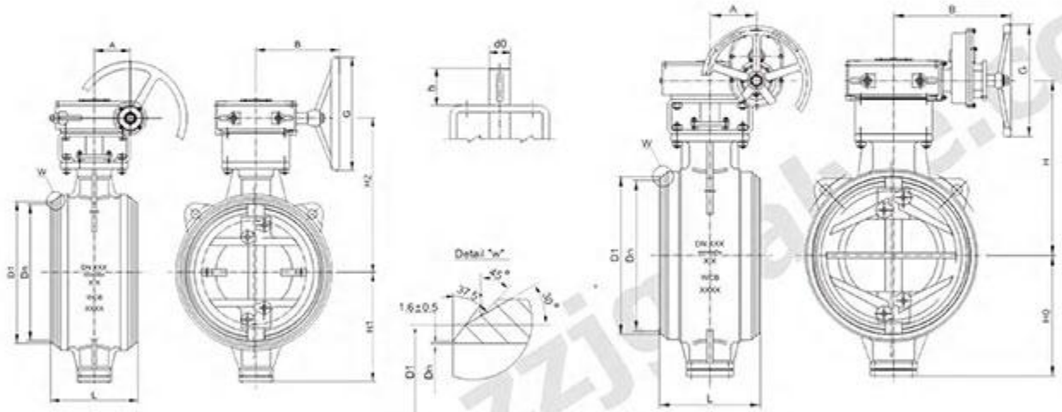

Type:D363H-10/16C DN80～1800 NPS3"～72"																
DN	NPS	L	1.0MPa							1.6MPa						
			BW		Dimension					BW		Dimension				
			Dn	D1	H0	H	A	B	G	Dn	D1	H0	H	A	B	G
80	3"	180	82	91	85	225	50	144	180	82	91	85	225	50	144	180
100	4"	190	106	117	100	245	50	144	180	106	117	100	245	50	144	180
125	5"	200	132	144	170	290	63	200	300	132	144	170	290	63	200	300
150	6"	210	159	172	180	310	63	200	300	159	172	180	310	63	200	300
200	8"	230	206	223	205	360	63	200	300	206	223	205	360	63	200	300
250	10"	250	259	278	235	395	80	230	350	259	278	235	395	80	230	350
300	12"	270	308	329	265	425	80	230	350	308	329	265	425	80	230	350
350	14"	290	340	362	305	475	125	260	400	340	362	305	475	125	260	400
400	16"	310	388	413	335	520	125	260	400	388	413	335	520	125	260	400
450	18"	330	439	464	365	550	125	260	400	439	464	365	550	125	260	400
500	20"	350	488	516	405	615	125	370	400	488	516	405	615	125	370	400
600	24"	390	589	619	465	665	160	398	500	589	619	465	665	160	398	500
700	28"	430	693	721	540	730	200	418	600	693	721	540	730	200	418	600
800	32"	470	793	825	625	865	200	418	600	793	825	625	865	200	418	600
900	36"	510	894	927	690	930	263	510	700	894	927	690	930	263	510	700
1000	40"	550	996	1029	755	1030	263	510	700	996	1029	755	1030	263	510	700
1200	48"	630	1194	1235	880	1165	333	550	800	1194	1235	880	1165	333	550	800
1400	56"	710	1394	1440	1010	1335	333	550	800	1394	1440	1010	1335	333	550	800
1600	64"	790	1594	1640	1125	1470	374	590	900	1594	1640	1125	1470	374	590	900
1800	72"	870	1794	1840	1240	1585	374	590	900	1794	1840	1240	1585	374	590	900

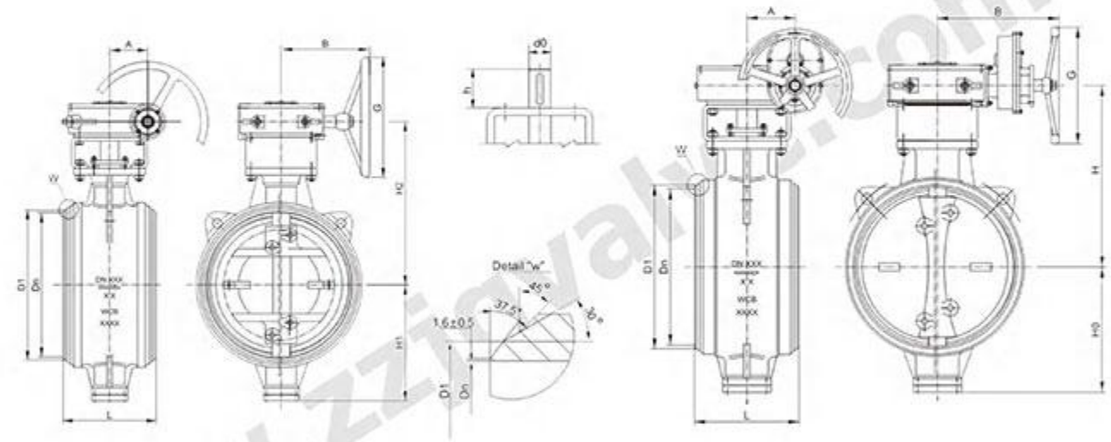

Type:D363H-25/40C DN80～1600 D363H-CL150 NPS3"～64"																
DN	NPS	L	2.5MPa							4.0MPa						
			BW		Dimension					BW		Dimension				
			Dn	D1	H0	H	A	B	G	Dn	D1	H0	H	A	B	G
80	3"	180	78	91	85	225	50	144	180	78	91	85	225	50	144	180
100	4"	190	102	117	100	245	50	144	180	102	117	100	245	50	144	180
125	5"	200	128	144	170	290	63	200	300	128	144	170	290	63	200	300
150	6"	210	154	172	180	310	63	200	300	154	172	180	310	80	230	350
200	8"	230	203	223	205	360	80	230	350	203	223	205	360	80	230	350
250	10"	250	255	278	235	395	80	230	350	255	278	235	395	125	260	400
300	12"	270	305	329	265	425	125	260	400	305	329	265	425	125	260	400
350	14"	290	337	362	305	475	125	260	400	337	362	305	475	125	370	400
400	16"	310	387	413	335	520	125	370	400	387	413	340	620	160	398	500
450	18"	330	438	464	365	550	125	370	400	438	464	390	645	200	418	600
500	20"	350	489	516	405	615	160	398	500	489	516	415	670	200	418	600
600	24"	390	591	619	465	665	200	418	600	591	619	500	740	200	418	600
700	28"	430	686	721	540	760	200	418	600	686	721	580	900	263	510	700
800	32"	470	787	825	625	865	263	510	700	787	825	665	975	333	550	800
900	36"	510	889	927	690	965	263	510	700	889	927	690	1010	333	550	800
1000	40"	550	990	1029	755	1040	263	510	700	-	-	-	-	-	-	-
1200	48"	630	1194	1235	880	1165	333	550	800	-	-	-	-	-	-	-
1400	56"	710	1394	1440	1010	1355	374	590	900	-	-	-	-	-	-	-
1600	64"	790	1594	1640	1190	1580	374	590	900	-	-	-	-	-	-	-

Metal Seal Butterfly Valve (Quadruple Offset)

Overview

It is a high-performance valve developed by our company to solve the problem that the three offset butterfly valve cannot achieve two-way zero leakage.

The sealing structure has been fundamentally changed, and the sealing effect is mainly achieved by relying on the sealing specific pressure generated by the torsional extrusion of the sealing auxiliary hair.

When the medium flows forward and reverse, the sealing pair acts under the dual action of torsional sealing pressure and part of the medium pressure, so that the valve can achieve two-way zero leakage, high temperature and high pressure resistance, and wear resistance, thereby extending the service life of the valve.

Applications






Sealing test 1.1*PN Shell test 1.5*PN

Technical Performance Specifications					
Nominal diameter (mm)	Nominal pressure (Mpa)	Test pressure (Mpa)		Applicable temperature	Applicable medium
		Shell test	Sealing test		
50~3000	0.6	0.9	0.66	0~80°C 0~200°C 0-400 °C	clean water sewage oil etc.
	1.0	1.5	1.1		
	1.6	2.4	1.76		
	2.5	3.75	2.76		
	4.0	6.0	4.4		
	4.0	6.0	4.4		
	6.4	9.6	7.04		
	10.0	15.0	11.0		
50-3000	Class 150	3.0	2.2		
	Class 300	7.5	5.5		
50-1000	Class 600	16.5	12.1		
	Class 900	22.5	16.5		
	Class 1500	37.5	27.5		

Main Parts Materials	
Part name	Material name or code
Body	Ductile iron, WCB, carbon steel, CF8, CF3, CF8M, CF3M
Plate	WCB, Q235, CF8, CF3, CF8M, CF3M
Stem	20Cr13, 304, 316, 17-4PH
Seat	13Cr, stainless steel, carbide, STL

Metal Seal Butterfly Valve (Quadruple Offset)

Main Design & Manufacturing Standards		
Standard content	Standard	Standard name
Flange standard	GB/T 9113	Integral steel pipe flanges (PN designated)
	GB/T 17241.6	Integral cast iron flanges (PN designated)
	HG/T 20592	Steel pipe flanges (PN designated)
	HG/T 20615	Steel pipe flanges(Class designated)
	HG/T 20623	Large diameter steel pipe flanges (Class designated)
	ASME B16.47	Large Diameter Steel Flanges NPS 26 Through NPS 60 Metric /Inch Standard
	ASME B16.5	Pipe Flanges and Flanged Fittings NPS 1/2 Through NPS 24 Metric/Inch Standard
Structure length standard	GB/T 12221	Metal valves - Face to face, end to end, center toface and center to end dimensions
	ISO 5752:1982	Metal valves for use in flanged pipe systems Face-to-face and center-to-face dimensions, MOD
	API 609	Butterfly Valves: Double-flanged, Lugand Wafer-type, and Butt-welding Ends
Pressure test standard	GB/T 13927	Industrial valves - Pressure testing
	ISO 5208:2015	Industrial valves - Pressure testing of metallic valves, MOD
	API 598	Valve Inspection and Testing
Structural design standard	GB/ T 26146	General valve - Eccentric semi-ball valve
	GB/T 12238	General valves - Flange and wafer connection butterfly valves
Use material standard	GB/T 12226	General purpose industrial valves - Specification of flake graphite iron castings
	GB/T 12227	General purpose industrial valves - Specification of spheroidal graphite iron castings
	GB/T 12229	General purpose industrial valves - Specification of carbon steel castings
	GB/T 12230	General purpose industrial valves - Specification of stainless steel castings
	ASTM A351	Standard Specification for Castings, Austenitic, for Pressure-Containing Parts
	ASTM A216	Standard Specification for Steel Castings, Carbon, Suitable for Fusion Welding, for High-Temperature Service

Operation

Main types: The main types of this valve include manual, worm gear, electric, pneumatic, and hydraulic. Among them, pneumatic valves and hydraulic valves are suitable for pressure air and pressure liquid sources.

Working Principle

Quadruple Offset Design

Offset 1 - axial eccentricity: the rotation center of the valve deviates from the contact plane with the sealing surface, forming eccentricity;

Offset 2 - radial eccentricity: the center of rotation of the valve and the center of the pipeline are not in the same center line;

Offset 3 - angular eccentricity: the center of the valve sealing surface forms an angle with the center of the pipeline;

Offset 4 - Angle eccentricity: The meshing line on the short side of the sealing surface

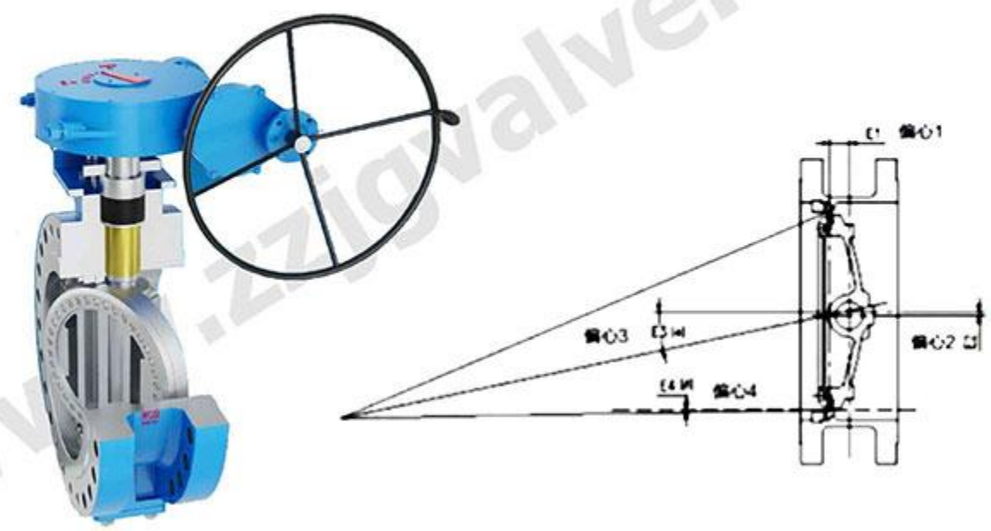

Metal Seal Butterfly Valve (Quadruple Offset)

When the medium flows forward, the force exerted by the driving device on the valve stem drives the wide plate, causing the valve plate sealing surface to generate a forced sealing force, which acts on the valve seat sealing surface while the medium pressure generates an auxiliary sealing force, causing the valve plate sealing surface to press the valve seat sealing surface tightly to form a good seal.

When the medium flows in the opposite direction, driven by the preload force and the piston effect force of the medium, the valve seat sealing surface is pressed against the valve plate sealing surface to form a good seal.

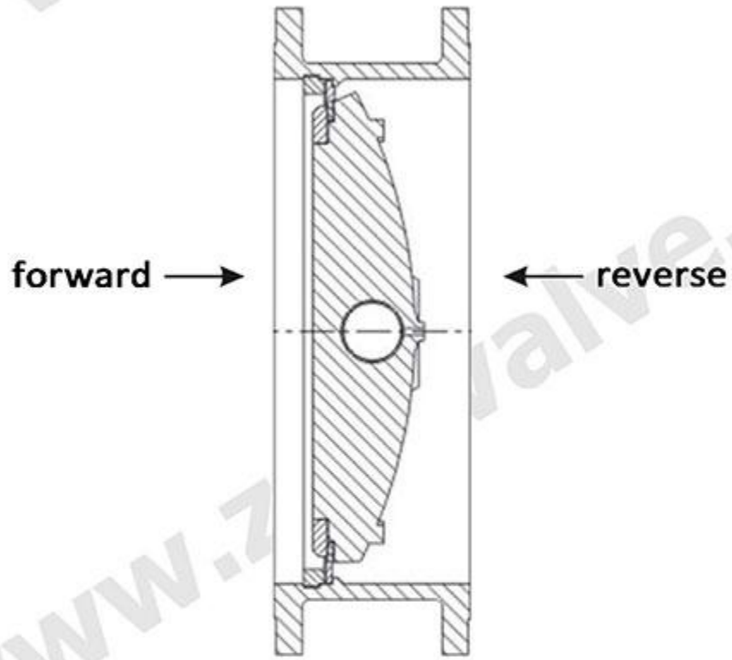

Features

1. Quadruple eccentric cam design for sealing zero leakage.
2. Bi-directional flowing medium & High-quality sealing effect.
3. Designed in strict accordance with API609 standard. Self-alignment for deformation by different working conditions.


removable


non-removable


all metal sealing ring


multi-layer composite

4. According to the requirements of working conditions, the valve seat and sealing ring can produce extremely high hardness and corrosion resistance, with the advantages of erosion resistance, wear resistance, high temperature and high-pressure resistance, long service life, etc.
5. Replaceable sealing pair for maintenance.
6. Small fluid resistance, small installation dimension, small opening/closing torque.


replaceable


non-replaceable

Metal Seal Butterfly Valve (Quadruple Offset)

Basic Configuration Cross-section Diagram			
No.	Name	Valve body material	Valve body stainless steel material
1a	Body	ASTM A216 WCB/EN10213 1.0619	ASTM A351 CF8M/EN102131.4408
2a	Disc	ASTM A216 WCB/EN10213 1.0619	ASTM A351 CF8M/EN102131.4408
2b	Plate pressure ring	ASTM A276 420	ASTM A182 Type F316ZEN10222-51.4401
2c	Screw	UNS S31600	UNS S31600
3a	Sealing ring	ASTM A182 Type F304/EN10222-T5	ASTM A182 Type F316/EN10222-51.4401
3b	Graphite gasket	UNS S31600+graphite	UNS S31600+graphite
4a	Upper Stem	UNS S17400(17-4PH)	UNS S17400(17-4PH)
4b	Pin	UNS S17400(17-4PH)	UNS S17400(17-4PH)
4c	Lower stem	UNS S17400(17-4PH)	UNS S17400(17-4PH)
4d	Pin	UNS S17400(17-4PH)	UNS S17400(17-4PH)
5a	Double-end stud	ISO3506 A4(AISI 316)	ISO3506 A4(AISI 316)
5b	Nut	UNS S31600	UNS S31600
5c	Packing gland	ASTM A216 WCB/EN102131.0619	ASTM A351 CF8M/EN102131.4408
5d	Packing	Graphite	Graphite
5e	Packing ring	UNS S31600	UNS S31600
5f	Upper shaft sleeve	UNS S31600+H60	UNS S31600+H60
5h	Cock	UNS S31600	UNS S31600
6a	Bottom flange	A105	ASTM A182 Type F316/EN10222-51.4401
6b	Screw	UNS S31600	UNS S31600
6c	Winding graphite gasket	UNS S31600+graphite	UNS S31600+graphite
7a	Locking ring	UNS S31600	UNS S31600
7b	Lower shaft sleeve	UNS S31600+H60	UNS S31600+H60
7C	Block	A105	UNS S31600
7d	Thrust bearing	A105	UNS S31600
7e	Thrust bearing gasket	A105	UNS S31600
8a	Seat ring	ASTM A182 Type F304/EN10222-T5	ASTM A182 Type F316/EN10222-51.4401
8b	Seat surface hardening treatment	Stellite* gr.21	Stellite* gr.21
8C	Graphite gasket	UNS S31600+graphite	UNS S31600+graphite
9a	Bracket	ASTM A216 WCB/EN10213 1.0619	ASTM A216 WCB/EN102131.0619
9b	Screw	UNS S31600	UNS S31600
10a	Ring	ASTM A276 420	ASTM A182 Type F316ZEN10222-51.4401
10b	Bolt	UNS S31600	UNS S31600

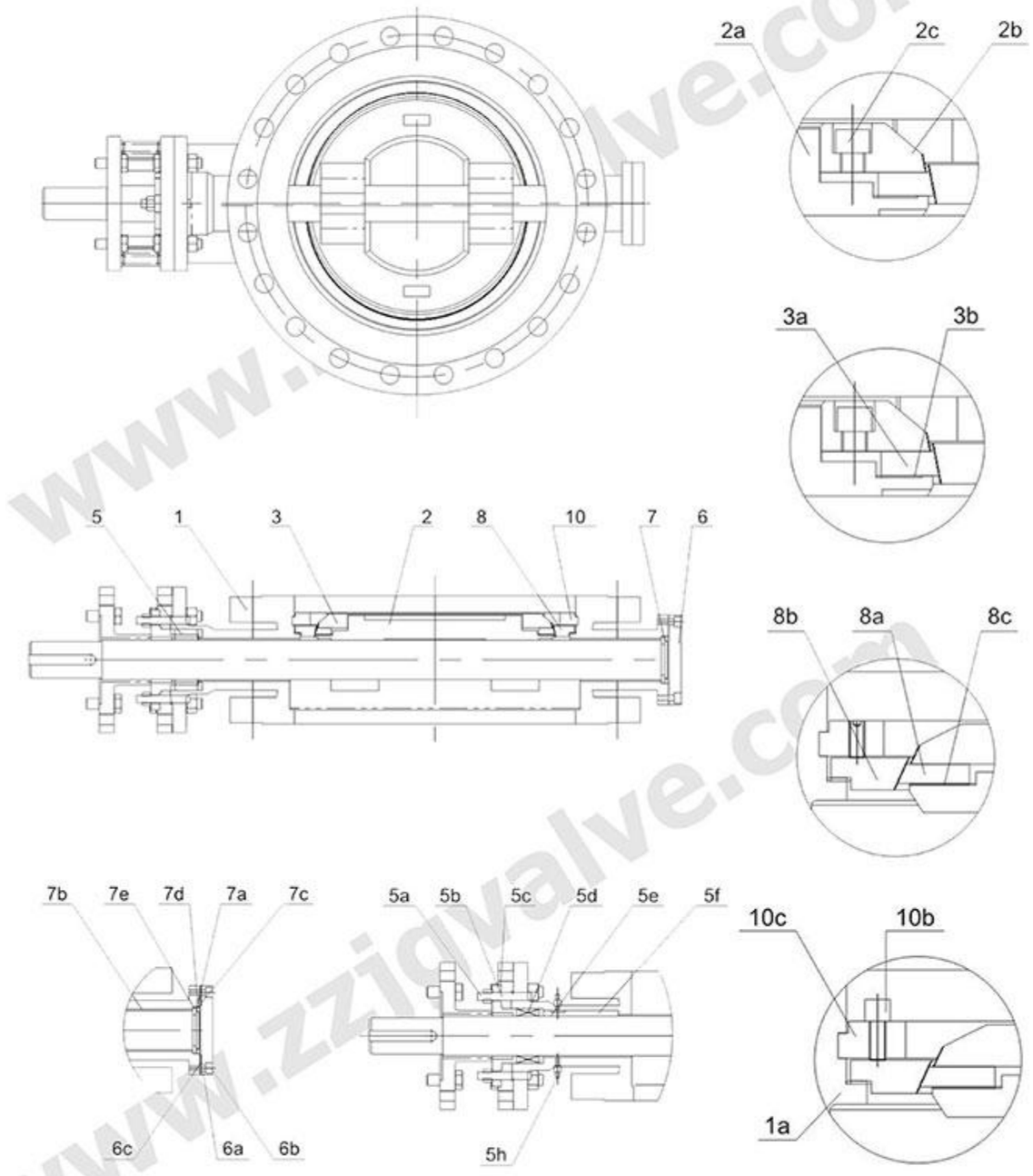

Metal Seal Butterfly Valve (Quadruple Offset)

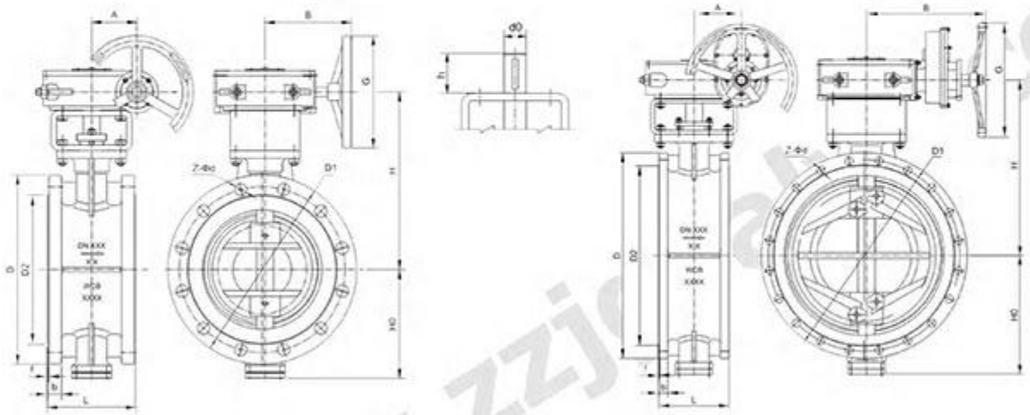

Type:D344H-10/16C DN50～DN2000 NPS2”～80”																						
DN	L	1.0MPa										1.6MPa										
		Flange Size						Dimension					Flange Size						Dimension			
		D	D1	D2	f	b	Z-Φd	H0	H	A	B	G	D	D1	D2	f	b	Z-Φd	H0	H	A	B	G
50	108	165	125	102	3	18	4-Φ18	82.5	195	50	144	180	165	125	102	3	18	4-Φ18	82.5	195	50	144	180
65	112	185	145	122	3	18	8-Φ18	92.5	215	50	144	180	185	145	122	3	18	8-Φ18	92.5	215	50	144	180
80	114	200	160	138	3	20	8-Φ18	100	215	50	144	180	200	160	138	3	20	8-Φ18	100	215	50	144	180
100	127	220	180	158	3	20	8-Φ18	110	235	50	144	180	220	180	158	3	20	8-Φ18	110	235	50	144	180
125	140	250	210	188	3	22	8-Φ18	125	290	63	200	300	250	210	188	3	22	8-Φ18	125	290	63	200	300
150	140	285	240	212	3	22	8-Φ22	180	310	63	200	300	285	240	212	3	22	8-Φ22	180	310	63	200	300
200	152	340	295	268	3	24	8-Φ22	202	360	63	200	300	340	295	268	3	24	12-Φ22	202	360	63	200	300
250	165	395	350	320	3	26	12-Φ22	235	395	80	230	350	405	355	320	3	26	12-Φ26	235	395	80	230	350
300	178	445	400	370	4	26	12-Φ22	265	425	80	230	350	460	410	378	4	28	12-Φ26	265	425	80	230	350
350	190	505	460	430	4	26	16-Φ22	305	475	125	260	400	520	470	438	4	30	16-Φ26	305	475	125	260	400
400	216	565	515	482	4	26	16-Φ26	335	520	125	260	400	580	525	490	4	32	16-Φ30	335	520	125	260	400
450	222	615	565	532	4	28	20-Φ26	365	550	125	260	400	640	585	550	4	40	20-Φ30	365	550	125	260	400
500	229	670	620	585	4	28	20-Φ26	405	610	125	370	400	715	650	610	4	44	20-Φ33	405	610	125	370	400
600	267	780	725	685	5	34	20-Φ30	450	655	160	398	500	840	770	725	5	54	20-Φ36	445	685	160	398	500
700	292	895	840	800	5	34	24-Φ30	520	725	160	398	500	910	840	795	5	40	24-Φ36	520	725	200	418	600
800	318	1015	950	905	5	36	24-Φ33	605	795	200	418	600	1025	950	900	5	42	24-Φ39	605	795	200	418	600
900	330	1115	1050	1005	5	38	28-Φ33	655	885	200	418	700	1125	1050	1000	5	44	28-Φ39	655	885	263	510	700
1000	410	1230	1160	1110	5	38	28-Φ36	715	950	200	418	700	1255	1170	1115	5	46	28-Φ42	715	950	263	510	700
1200	470	1455	1380	1330	5	44	32-Φ39	840	1125	263	510	700	1485	1390	1330	5	52	32-Φ48	840	1125	333	550	800
1400	530	1675	1590	1535	5	48	36-Φ42	980	1275	333	550	800	1685	1590	1530	5	58	36-Φ48	980	1275	333	550	800
1600	600	1915	1820	1760	5	52	40-Φ48	1125	1470	333	550	800	1930	1820	1750	5	64	40-Φ56	1125	1470	374	590	900
1800	670	2115	2020	1960	5	56	44-Φ48	1240	1585	374	590	900	2130	2020	1950	5	68	44-Φ56	1240	1585	374	590	900
2000	760	2325	2230	2170	5	60	48-Φ48	1380	1720	374	590	900	2345	2230	2150	5	70	48-Φ62	1380	1720	453	635	1000

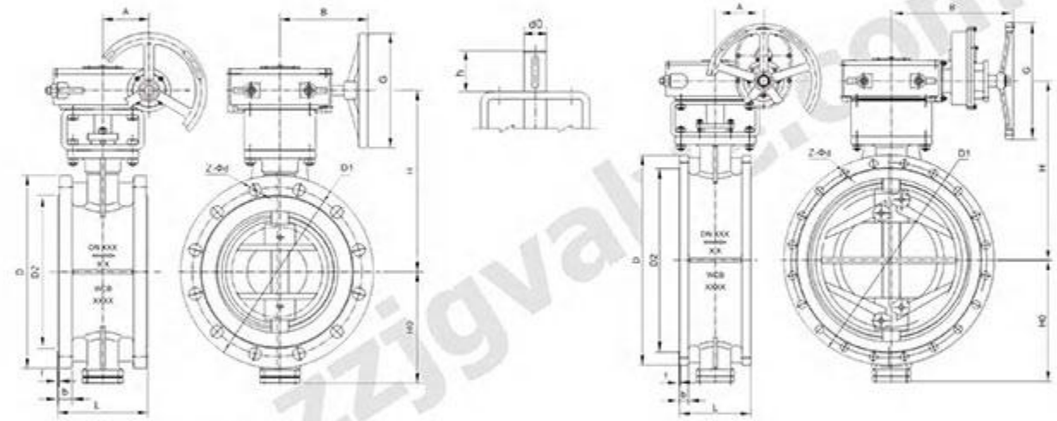

Type:D344H-25/40C DN50～DN1600 NPS2”～64”																										
DN	L	2.5MPa												4.0MPa												
		Flange Size							Dimension					Flange Size							Dimension					
		D	D1	D2	f	b	z-Φd	Z-W	H0	H	A	B	G	D	D1	D2	f	b	z-Φd	Z-W	H0	H	A	B	G
50	108	165	125	102	3	20	4-Φ18	-	82.5	195	50	144	180	165	125	102	3	20	4-Φ18	-	82.5	195	50	144	180
65	112	185	145	122	3	22	8-Φ18	-	92.5	215	50	144	180	185	145	122	3	22	8-Φ18	-	92.5	210	50	144	180
80	114	200	160	138	3	24	8-Φ18	-	100	215	50	144	180	200	160	138	3	24	8-Φ18	-	100	230	50	144	180
100	127	235	190	162	3	24	8-Φ22	-	118	235	50	144	180	235	190	162	3	24	8-Φ22	-	118	250	50	144	180
125	140	270	220	188	3	26	8-Φ26	-	135	290	63	200	300	270	220	188	3	26	8-Φ26	-	135	295	63	200	300
150	140	300	250	218	3	28	8-Φ26	-	180	310	63	200	300	300	250	218	3	28	8-Φ26	-	215	340	80	230	350
200	152	360	310	278	3	30	8-Φ26	4-M24	185	370	80	230	350	375	320	285	3	34	12-Φ30	-	220	390	80	230	350
250	165	425	370	335	3	32	8-Φ30	4-M27	215	397	80	230	350	450	385	345	3	38	8-Φ33	4-M30	265	485	125	260	400
300	178	485	430	395	4	34	12-Φ30	4-M27	250	455	125	260	400	515	450	310	4	42	12-Φ33	4-M30	290	490	125	260	400
350	190	555	490	450	4	38	12-Φ33	4-M30	285	495	125	260	400	580	510	465	4	46	12-Φ36	4-M33	310	540	125	370	400
400	216	620	550	505	4	40	12-Φ36	4-M33	330	535	125	370	400	660	585	535	4	50	12-Φ39	4-M36	340	620	160	398	500
450	222	670	600	555	4	46	16-Φ36	4-M33	345	560	125	370	400	685	610	560	4	57	16-Φ39	4-M36	390	645	200	418	600
500	229	730	660	615	4	48	16-Φ36	4-M33	390	620	160	398	500	755	670	615	4	57	16-Φ42	4-M39	415	670	200	418	600
600	267	845	770	720	5	58	16-Φ39	4-M36	445	685	200	418	600	890	795	735	5	72	16-Φ48	4-M45	500	740	200	418	600
700	292	960	875	820	5	50	20-Φ42	4-M39	545	750	200	418	600	995	900	840	5	64	20-Φ48	4-M45	580	900	263	510	700
800	318	1085	990	930	5	54	20-Φ48	4-M45	625	870	263	510	700	1140	1030	960	5	72	20-Φ56	4-M52	665	975	333	550	800
900	330	1185	1090	1030	5	58	24-Φ48	4-M45	685	965	263	510	700	1250	1140	1070	5	76	24-Φ56	4-M52	690	1010	333	550	800
1000	410	1320	1210	1140	5	62	24-Φ56	4-M52	755	1040	263	510	700	1360	1250	1180	5	80	24-Φ56	4-M52	755	1090	333	550	800
1200	470	1530	1420	1350	5	70	28-Φ56	4-M52	860	1180	333	550	800	1575	1460	1380	5	88	28-Φ62	4-M56	950	1365	374	590	900
1400	530	1755	1640	1560	5	76	32-Φ62	4-M56	1020	1365	374	590	900	1795	1680	1600	5	98	32-Φ62	4-M56	1090	1475	453	635	1000
1600	600	1975	1860	1780	5	84	36-Φ62	4-M56	1190	1580	374	590	900	-	-	-	-	-	-	-	-	-	-	-	-

Metal Seal Butterfly Valve (Quadruple Offset)

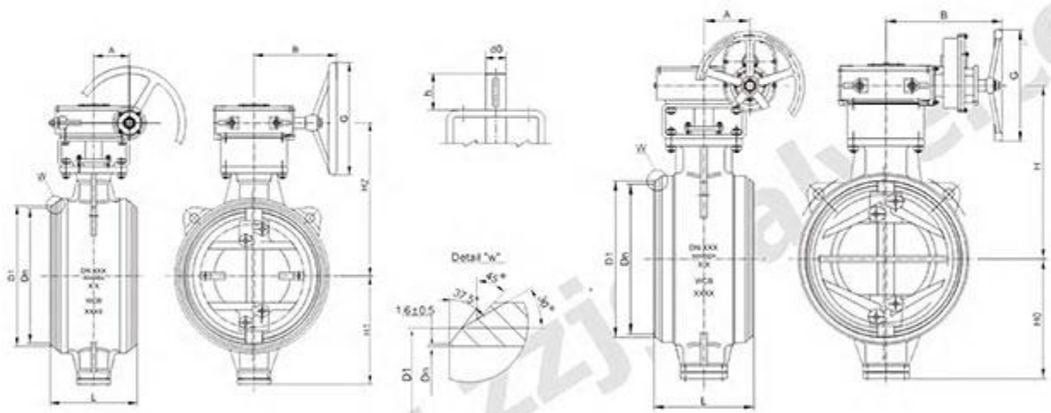

Type:D364H-10/16C DN80～1800 NPS3"～72"																
DN	NPS	L	1.0MPa							1.6MPa						
			BW		Dimension					BW		Dimension				
			Dn	D1	H0	H	A	B	G	Dn	D1	H0	H	A	B	G
80	3"	180	82	91	85	225	50	144	180	82	91	85	225	50	144	180
100	4"	190	106	117	100	245	50	144	180	106	117	100	245	50	144	180
125	5"	200	132	144	170	290	63	200	300	132	144	170	290	63	200	300
150	6"	210	159	172	180	310	63	200	300	159	172	180	310	63	200	300
200	8"	230	206	223	205	360	63	200	300	206	223	205	360	63	200	300
250	10"	250	259	278	235	395	80	230	350	259	278	235	395	80	230	350
300	12"	270	308	329	265	425	80	230	350	308	329	265	425	80	230	350
350	14"	290	340	362	305	475	125	260	400	340	362	305	475	125	260	400
400	16"	310	388	413	335	520	125	260	400	388	413	335	520	125	260	400
450	18"	330	439	464	365	550	125	260	400	439	464	365	550	125	260	400
500	20"	350	488	516	405	615	125	370	400	488	516	405	615	125	370	400
600	24"	390	589	619	465	665	160	398	500	589	619	465	665	160	398	500
700	28"	430	693	721	540	730	200	418	600	693	721	540	730	200	418	600
800	32"	470	793	825	625	865	200	418	600	793	825	625	865	200	418	600
900	36"	510	894	927	690	930	263	510	700	894	927	690	930	263	510	700
1000	40"	550	996	1029	755	1030	263	510	700	996	1029	755	1030	263	510	700
1200	48"	630	1194	1235	880	1165	333	550	800	1194	1235	880	1165	333	550	800
1400	56"	710	1394	1440	1010	1335	333	550	800	1394	1440	1010	1335	333	550	800
1600	64"	790	1594	1640	1125	1470	374	590	900	1594	1640	1125	1470	374	590	900
1800	72"	870	1794	1840	1240	1585	374	590	900	1794	1840	1240	1585	374	590	900

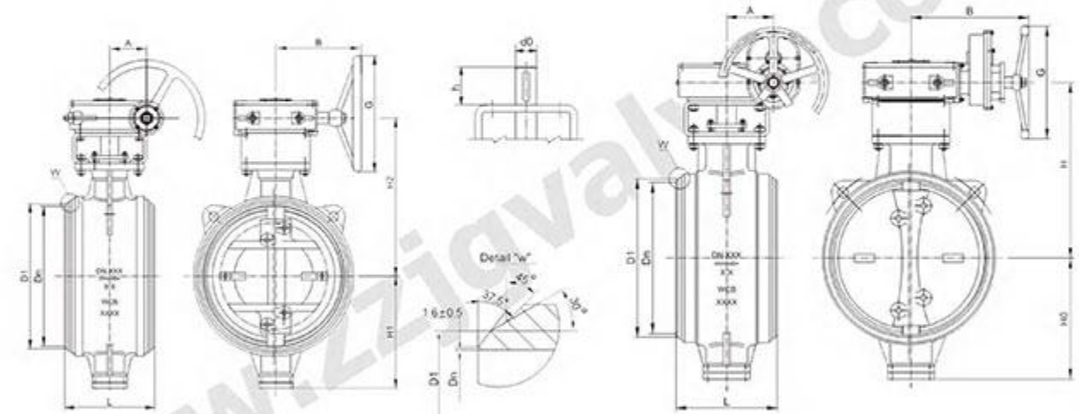

Type:D364H-25/40C DN80～1600 D364H-CL150 NPS3"～64"																
DN	NPS	L	2.5MPa							4.0MPa						
			BW		Dimension					BW		Dimension				
			Dn	D1	H0	H	A	B	G	Dn	D1	H0	H	A	B	G
80	3"	180	78	91	85	225	50	144	180	78	91	85	225	50	144	180
100	4"	190	102	117	100	245	50	144	180	102	117	100	245	50	144	180
125	5"	200	128	144	170	290	63	200	300	128	144	170	290	63	200	300
150	6"	210	154	172	180	310	63	200	300	154	172	180	310	80	230	350
200	8"	230	203	223	205	360	80	230	350	203	223	205	360	80	230	350
250	10"	250	255	278	235	395	80	230	350	255	278	235	395	125	260	400
300	12"	270	305	329	265	425	125	260	400	305	329	265	425	125	260	400
350	14"	290	337	362	305	475	125	260	400	337	362	305	475	125	370	400
400	16"	310	387	413	335	520	125	370	400	387	413	340	620	160	398	500
450	18"	330	438	464	365	550	125	370	400	438	464	390	645	200	418	600
500	20"	350	489	516	405	615	160	398	500	489	516	415	670	200	418	600
600	24"	390	591	619	465	665	200	418	600	591	619	500	740	200	418	600
700	28"	430	686	721	540	760	200	418	600	686	721	580	900	263	510	700
800	32"	470	787	825	625	865	263	510	700	787	825	665	975	333	550	800
900	36"	510	889	927	690	965	263	510	700	889	927	690	1010	333	550	800
1000	40"	550	990	1029	755	1040	263	510	700	-	-	-	-	-	-	-
1200	48"	630	1194	1235	880	1165	333	550	800	-	-	-	-	-	-	-
1400	56"	710	1394	1440	1010	1355	374	590	900	-	-	-	-	-	-	-
1600	64"	790	1594	1640	1190	1580	374	590	900	-	-	-	-	-	-	-

Rotary Butterfly Valve

Overview

Rotary Butterfly Valve's main structure is similar to butterfly valve, with the characteristics of short structure and small size of butterfly valve, so it can manufacture large-caliber, extra-large caliber and super-large caliber valves;

The valve combines the functions and benefits of butterfly valves, half ball valves, gate valves and globe valves, and has its own completely different powerful functions and benefits.

Small size, light weight, convenient transportation, installation, maintenance and repair, reliable operation and a series of advantages, has become a major technological revolution in the valve industry.

Features

It can not only be reliably shut down in the forward pressure, but also reliably shut down in the reverse pressure or the reverse pressure is much greater than the forward pressure

On the two sealing surfaces of the sealing pair, advanced processes such as overlay welding, ether laser sputtering, vacuum protection seepage overlay welding and other advanced processes can be used to form gradient functional materials such as martensitic stainless steel, austenitic stainless steel, cemented carbide, cermet, synthetic diamond and so on according to different hardness request

It can automatically align the center, and can automatically cross the range to compensate for wear;

Make full use of the energy of the medium in the valve when closing, and automatically apply extremely high sealing specific pressure, so that the high hard sealing pair can achieve reliable zero leakage.

Instant closing, instant opening, no friction between the sealing pairs.

Applications

It is widely used in metallurgy, mining, petrochemical, chemical, electric power, environmental protection, municipal and other industries and departments of pipeline opening and closing, regulation. Applicable medium: water, sewage, oil, etc.






Main Parts Materials	
Part name	Material name or code
Body	Ductile iron, WCB, CF8, CF3, CF8M, CF3M
Plate	WCB, CF8, CF3, CF8M, CF3M
Stem	20Cr13, 304, 316, 17-4PH
Seat	A105, 304, 316

Sealing test 1.1*PN Shell test 1.5*PN

Technical Performance Specifications					
Nominal diameter (mm)	Nominal pressure (Mpa)	Test pressure (MPa)		Applicable temperature	Applicable medium
		Shell test	Sealing test		
DN50~3000mm	0.6	0.9	0.66	0~80℃ 0~200℃	clean water sewage oil etc.
	1.0	1.5	1.1		
	1.6	2.4	1.76		
	2.5	3.75	2.76		
	4.0	6.0	4.4		

Main Design & Manufacturing Standards		
Standard content	Standard	Standard name
Flange standard	GB/T 9113	Integral steel pipe flanges (PN designated)
	GB/T 17241.6	Integral cast iron flanges (PN designated)
	HG/T 20592	Steel pipe flanges (PN designated)
	HG/T 20615	Steel pipe flanges (Class designated)
	HG/T 20623	Large diameter steel pipe flanges (Class designated)
	ASME B16.47	Large Diameter Steel Flanges NPS 26 Through NPS 60 Metric /Inch Standard
	ASME B16.5	Pipe Flanges and Flanged Fittings NPS 1/2 Through NPS 24 Metric/Inch Standard
Structure length standard	GB/T 12221	Metal valves - Face to face, end to end, center toface and center to end dimensions
	ISO 5752:1982	Metal valves for use in flanged pipe systems Face-to-face and center-to-face dimensions, MOD
	API 609	Butterfly Valves: Double-flanged, Lugand Wafer-type, and Butt-welding Ends
Pressure test standard	GB/T 13927	Industrial valves - Pressure testing
	ISO 5208:2015	Industrial valves - Pressure testing of metallic valves, MOD
	API 598	Valve Inspection and Testing
Structural design standard	GB/ T 26146	General valve - Eccentric semi-ball valve
	GB/T 12238	General valves - Flange and wafer connection butterfly valves
Use material standard	GB/T 12226	General purpose industrial valves - Specification of flake graphite iron castings
	GB/T 12227	General purpose industrial valves - Specification of spheroidal graphite iron castings
	GB/T 12229	General purpose industrial valves - Specification of carbon steel castings
	GB/T 12230	General purpose industrial valves - Specification of stainless steel castings
	ASTM A351	Standard Specification for Castings, Austenitic, for Pressure-Containing Parts
	ASTM A216	Standard Specification for Steel Castings, Carbon, Suitable for Fusion Welding, for High-Temperature Service

Operation

Main types: The main types of this valve include manual, worm gear, electric, pneumatic, and hydraulic. Among them, pneumatic valves and hydraulic valves are suitable for pressure air and pressure liquid sources.

Working Principle

The valve seat adopts the DBB (single piston effect) sealing principle, the sealing surface of the spool is a cubic curved surface, and the sealing surface of the valve seat is a primary conical surface. At the sealing point, the seat face is actually a slice of the cubic surface of the spool, so the combination is perfect.

It has the function of adapting (automatic positioning and overlapping of the center) and compensating for wear, because the center of rotation deviates from the geometric center of the spool, there is the actual effect of the spool entity constantly retreating and shrinking inward when the spool is opened, and the spool entity continues to advance and expands outward when the spool is closed, and its function is equivalent to the synthesis of hemispherical valves, gate valves, globe valves, and butterfly valves.

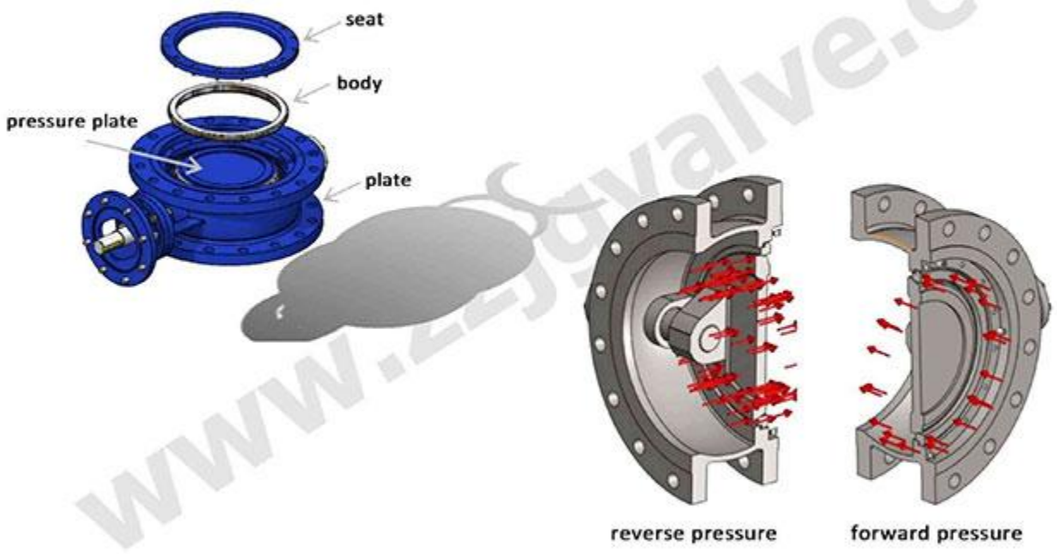

The main function of the bidirectional flow valve is to seal well both at forward pressure and when reverse pressure or reverse pressure is greater than forward pressure.

When the forward pressure acts, the medium pressure pushes the valve plate to move forward, the valve stem is deformed, and the sealing surface of the valve plate transmits pressure close to the sealing surface of the valve seat, and pushes the valve seat to the valve body step to make it dense and good.

When the reverse pressure acts, the medium pressure pushes the valve plate to move backwards, the valve stem is deformed, and the medium pressure simultaneously pushes the valve seat sealing surface to close to the valve plate sealing surface to transmit pressure, and pushes the valve seat to the valve plate deformation position to make it sealed well.

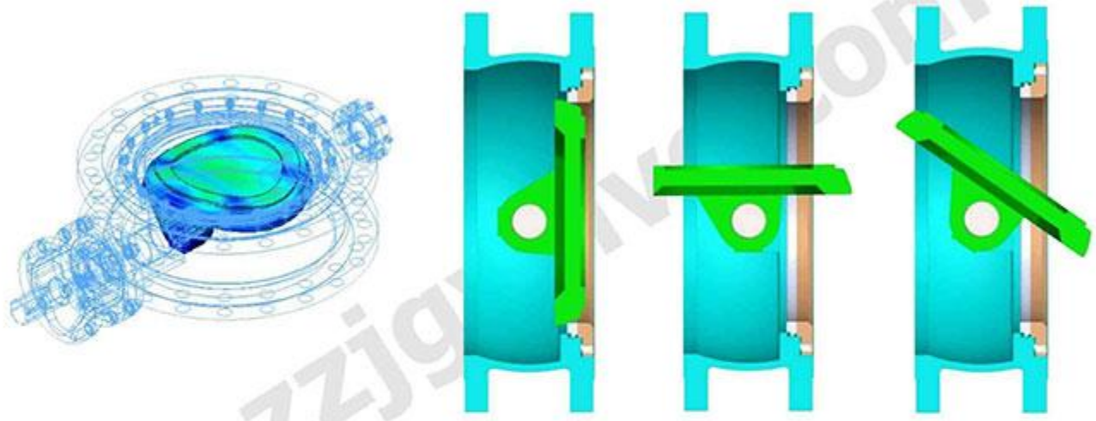

changes in different angles of valve opening

Rotary butterfly valve dimensions (<80℃)

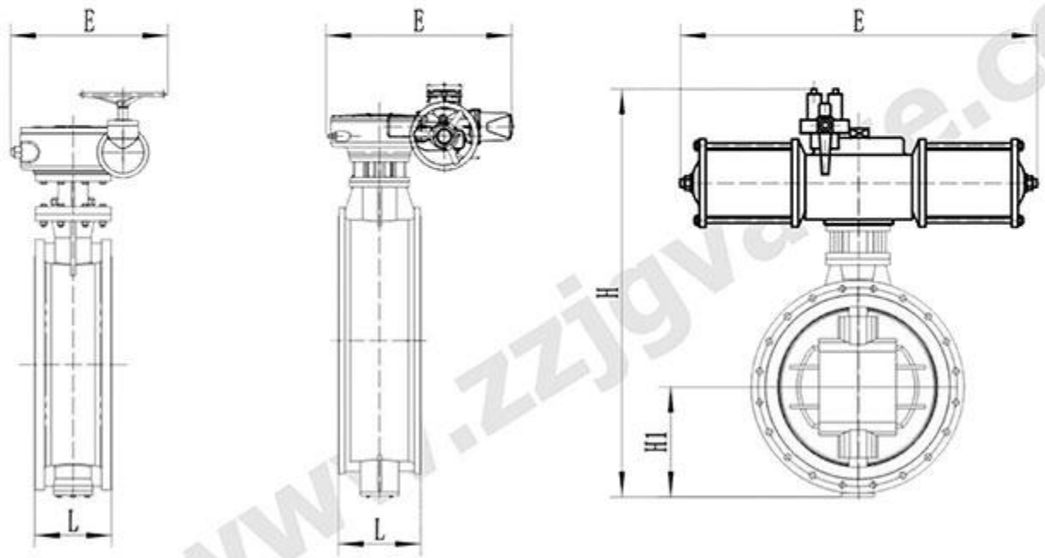

High temperature rotary butterfly valve dimensions (<425℃)

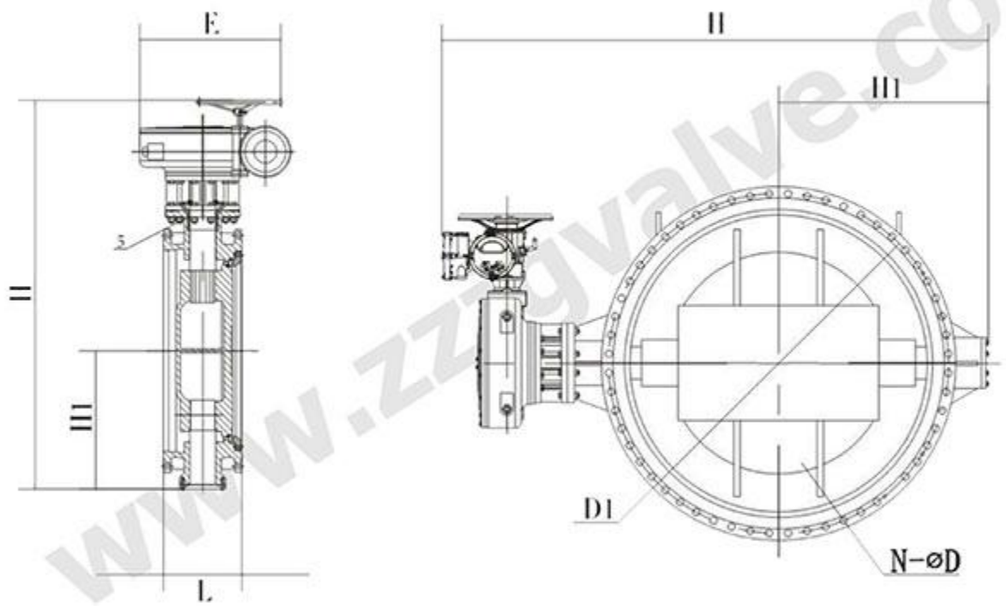

Rotary Butterfly Valve

DN	L	H1	E			H		
			Worm gear	pneumatic	electric	Worm gear	pneumatic	electric
100	127	150	200	355	255	420	675	600
125	140	170	200	355	255	460	715	640
150	140	210	280	355	315	550	800	705
200	152	245	425	250	315	760	850	775
250	165	276	425	250	315	830	925	945
300	178	280	560	450	315	895	1035	1070
350	190	325	560	450	315	950	1070	1140
400	216	345	580	450	315	1190	1190	1210
450	222	390	580	650	714	1255	1250	1335
500	229	442	580	650	714	1305	1290	1415
600	267	505	660	850	810	1340	1455	1605
700	292	550	550	850	810	1520	1585	1844
800	318	605	550	1250	810	1710	1700	2040
900	330	665	550	1250	863	1810	1965	2255
1000	410	710	750	1250	863	1960	2015	2380
1200	470	835	925	12S0	863	2250	250	2640
1400	530	935	925	1250	1055	2434	2550	2866
1600	600	1060	925	1250	1055	2780	2750	3156
1800	670	1175	980	1250	1183	3020	2950	3421
2000	760	1265	980	1500	1286	3270	3350	3685

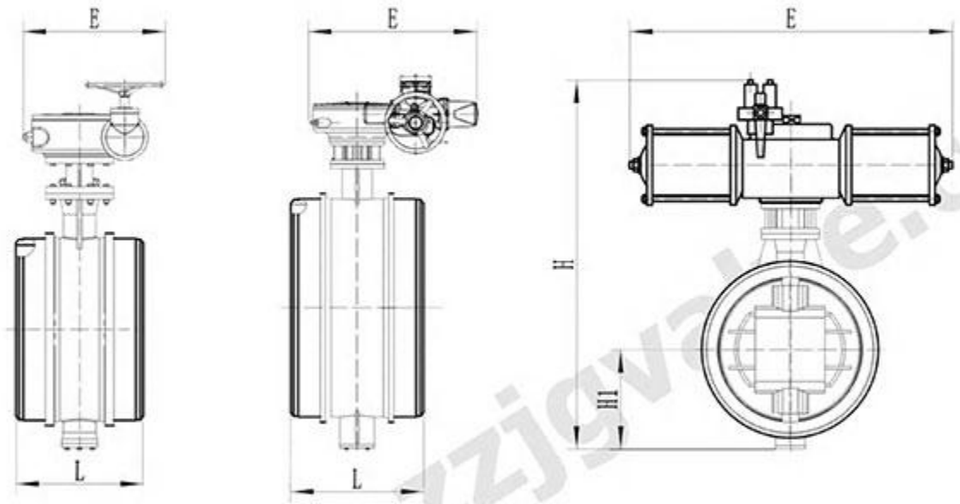

Main Dimensions of Welded Rotary Butterfly Valve

Nominal diameter (mm)		L	H1	H		
DN	NPS	PN6/PN10/PN16/PN25/PN40 CLass150/CLass300		Worm gear	pneumatic	electric
100	4	190	120	376	630	555
125	5	200	130	386	640	565
150	6	210	140	452	696	602
200	8	230	180	530	740	650
250	10	250	230	620	790	740
300	12	270	240	698	838	850
350	14	290	270	778	900	970
400	16	310	300	846	930	1010
450	18	330	340	1005	998	1082
500	20	350	360	1058	1045	1175
600	24	390	410	1195	1235	1410
700	28	430	510	1308	1390	1650
800	32	470	560	1505	1500	1830
900	36	510	620	1650	1810	2240
1000	40	550	670	1718	1860	2320
1200	48	630	780	2015	-	2406
1400	56	710	880	2265	-	2660
1600	64	790	1020	2547	-	2895

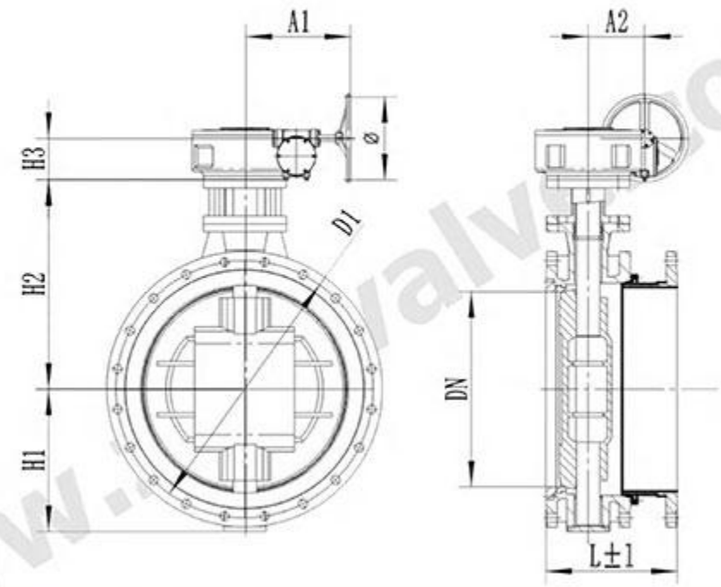

DQ342H-2.5/6/10/16 Flange Telescopic Rotary Butterfly Valve Connection Dimensions

DN	L	move	HI	H2	H3	A1	A2	Φ	0.25MPa		0.6MPa		1.0MPa		1.6MPa	
		ΔL							D1	n-d	D1	n-d	D1	n-d	D1	n-d
50	150	±10	82.5	150	66	135	42	150	110	4-Φ14	110	4-Φ14	125	4-Φ19	125	4-Φ19
65	170	±10	92.5	165	66	135	42	150	130	4-Φ14	130	4-Φ14	145	4-Φ19	145	4-Φ19
80	180	±10	100	170	66	135	42	150	150	4-Φ19	150	4-Φ19	160	8-Φ19	160	8-Φ19
100	190	±10	125	195	11	135	42	180	170	4-Φ19	170	4-Φ19	180	8-Φ19	180	8-Φ19
125	200	±10	142	220	77	135	42	180	200	8-Φ19	200	8-Φ19	210	8-Φ19	210	8-Φ19
150	210	±10	160	250	77	135	42	320	225	8-Φ19	225	8-Φ19	240	8-Φ23	240	8-Φ23
200	230	±12	190	275	107	202	60	320	280	8-Φ19	280	8-Φ19	295	8-Φ23	295	12-Φ23
250	250	±12	220	305	107	202	60	320	335	12-Φ19	335	12-Φ19	350	12-Φ23	355	12-Φ28
300	270	±15	245	350	126	220	93	320	395	12-Φ23	395	12-Φ23	400	12-Φ23	410	12-Φ28
350	290	±15	278	385	126	220	93	320	445	12-Φ23	445	12-Φ23	460	16-Φ23	470	16-Φ28
400	310	±15	305	435	157	287	123	400	495	16-Φ23	495	16-Φ23	515	16-Φ28	525	16-Φ31
450	330	±15	346	490	157	287	123	400	550	16-Φ23	550	15-Φ23	565	20-Φ28	585	20-Φ31
500	350	±20	375	505	165	360	184	390	600	20-Φ23	600	20-Φ23	620	20-Φ28	650	20-Φ34
600	390	±20	425	605	165	360	184	390	705	20-Φ26	705	20-Φ26	725	20-Φ31	770	20-Φ37
700	430	±20	495	675	195	410	204	500	810	24-Φ26	810	2-Φ26	840	24-Φ31	840	24-Φ37
800	470	±30	560	740	195	410	204	500	920	24-Φ31	920	24-Φ31	950	24-Φ34	950	24-Φ40
900	510	±30	625	805	235	521	217	500	1020	24-Φ31	1020	24-Φ31	1050	28-Φ34	1050	28-Φ40
1000	550	±30	680	865	235	521	217	500	1120	28-Φ31	1120	28-Φ31	1160	28-Φ37	1170	28-Φ43
1200	630	±35	800	1065	251	501	290	630	1320	32-Φ31	1340	32-Φ34	1380	32-Φ40	1390	32-Φ49
1400	710	±35	920	1207	343	656	312	800	1520	36-Φ31	1560	36-Φ37	1590	36-Φ43	1590	36-Φ49
1600	790	±40	1030	1317	370	750	414	800	1730	40-Φ31	1760	40-Φ37	1820	40-Φ49	1820	40-Φ56
1800	870	±40	1245	1457	470	800	440	900	1930	44-Φ31	1970	44-Φ40	2020	44-Φ48	2020	44-Φ56
2000	950	±50	1290	1625	470	800	440	900	2130	48-Φ30	2180	48-Φ43	2230	48-Φ48	2230	48-Φ62
2200	1000	±50	1450	1740	470	800	440	900	2340	52-Φ33	2390	52-Φ43	2440	52-Φ56	2440	52-Φ62
2400	1100	±50	1675	1875	480	990	595	1000	2540	56-Φ33	2600	56-Φ43	2650	56-Φ56	2650	56-Φ62
2600	1200	±50	1745	2010	480	990	595	1000	2740	60-Φ33	2810	60-Φ48	2850	60-Φ55	2850	60-d62
2800	1300	±50	1818	2100	480	990	595	1000	2950	64-Φ36	3020	64-Φ48	3070	64-Φ56	3070	64-Φ70
3000	1400	±50	1910	2200	480	990	595	1000	3160	68-Φ36	3220	68-Φ48	3290	68-Φ62	3300	68-Φ70

Plug Valve

Sleeve Plug Valve

API Pressure Balance Plug Valve

Lifting Plug Valve

Elastic Seat Plug Valve

Double Block and Bleed (DBB) Plug Valve Reduced Bore

Sleeve Plug Valve

Overview

The plug valve is a quick-open/close straight-through valve that can also be used for medium with suspended particles due to the wiping effect of the movement between the screw seal surfaces and the complete protection of contact with the flowing medium when fully opened.

Applications

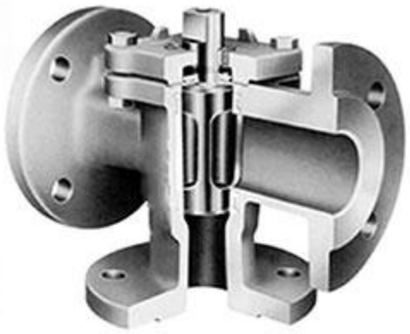

It is used to distribute the medium and change the flow direction of the medium, and its working temperature is not higher than 300°C.The nominal pressure is PN<1.6MPa.The nominal diameter is not more than 300mm. A multi-pass plug valve is recommended.

In the branch pipes, refining and cleaning equipment of oilfield exploitation, natural gas field exploitation, pipeline transportation, the nominal pressure is not greater than Class300, and the nominal diameter is not more than 300mm or the nominal pressure is not greater than Class7500, the nominal diameter is not more than 900mm, the working temperature is not higher than 340°C, and it is recommended to use oil-sealed conical plug valve.

Sleeve Plug Valve

For the equipment and pipelines of milk, juice, beer and other food enterprises and pharmaceutical factories, it is recommended to use austenitic stainless steel, tight-set conical plug valves.

In the large-scale chemical industry, in the pipeline and equipment containing corrosive media, the opening or closing speed is required to be fast, for the nitric acid-based medium, the PTFE sleeve sealed conical plug valve can be selected; For acetic acid-based media, Crl8Nil2M02Ti stainless steel PTFE sleeve can be selected with sealed conical plug valve.

In the pipeline and equipment of gas, natural gas and HVAC system, the nominal diameter is not more than 200nm.

Technical Parameters

Sealing Test1.1*PN, Shell Test1.5*PN (GB/T 13927 General Valve Pressure Test)

Technical Performance Specifications					
Nominal diameter (mm)	Nominal pressure (MPa)	Test pressure(MPa)		Applicable temperature (℃)	Applicable medium
		Shell test	Sealing test		
15-1000	0.6	0.9	0.66	0~100°C 0~200°C -29~550°C	water steam nitric acid caustic soda tanning liquid liquefied gas natural gas oil products etc.
	1.0	1.5	1.1		
	1.6	2.4	1.76		
	2.5	3.75	2.76		
	4.0	6.0	4.4		
	4.0	6.0	4.4		
	6.4	9.6	7.04		
	10.0	15.0	11.0		
	16.0	24.0	17.6		
15-1000	Class 150	3.0	2.2		
	Class 300	7.5	5.5		
	Class 600	16.5	12.1		
	Class 900	22.5	16.5		
	Class 1500	38.5	28.10		
	Class 2500	63.0	46.20		

Design & Manufacturing Standards		
No.	Design standards	Standard
1	Product design standards	GB/T 22130, API6D
2	Flange connection structure length standard	GB/T 12221, API6D
3	Butt welding connection structure length standard	GB/T 12221, API 6D EN588FI/F4/FS
4	End flange connection size standard	GB/T 9113, JB/T 79, HG/T 20592, ASME B16.5 EN1092
5	Fire safety design standards for valves	GB/T 22130, API 607
6	Small diameter standards for valves	GB/T 22130, API 6D
7	Welding end connection size standard	GB/T 12224, ASME B16.25
8	Inspection and testing standards	GB/T 13927, API 6D DIN3230

Main Materials

The valve body and the bonnet are connected to form a body cavity that accommodates the valve trim and the flow medium, and the selected materials are the key to determine the applicable medium and working conditions of the valve.

The valve core and stem are important internal parts of the plug valve, which not only bear the pressure and corrosion of the medium, but also determine the sealing performance and service life of the plug valve, and its material selection is very important.

The operating temperature is limited. Metal hard seal plug valve, the valve seat is made of corrosion-resistant and wear-resistant metal, which can withstand higher temperatures, and the processing accuracy of the valve core is very high, which must be corrosion-resistant and wear-resistant, and needs to be hardened by surface hardening. For acidic media such as crude oil, you can press NACE. The MR0175 standard controls the performance and quality of the selected materials.

Main Materials & Applicable Media		
Material	Applicable temperature	Applicable media
A105, WCB	-29°C~425°C	Non-corrosive media: saturated steam and superheated steam, high and low temperature oil products, liquefied gas, compressed air, water, natural gas
304, 316, CF8, CF8M	-196°C~570°C	Corrosive media: acetic acid, nitric acid, alkali, bleaching liquid, carbonic acid, tanning liquid and many other chemical products
CF3, CF3M, 304L, 316L	-196°C~570°°C	Corrosive media: acetic acid, nitric acid, alkali, bleaching liquid, carbonic acid, salty water, tanning liquid and many other chemical products
WC6, WC9	-29°C~570°C	Non-corrosive media: saturated and superheated steam, cold and hot oil, natural gas and air
LCB, LF2	-46°C~200°C	Non-corrosive media: seawater, carbon dioxide, acetylene, propylene and ethylene

Main Components & Materials (subject to the order contract)		
No.	Name	Material
1	cock	stainless steel
2	body	cast steel
3	sleeve	PTFE
4	gasket	PTFE
5	pressure pad	stainless steel
6	bonnet	WCB
7	gland	WCB
8	packing	PTFE
9	wrench	WCB
10	bolt	8.8
11	locating sleeve	stainless steel
12	bolt	8.8
13	nut	10
14	bolt	8.8
15	bolt	8.8
16	ring	45

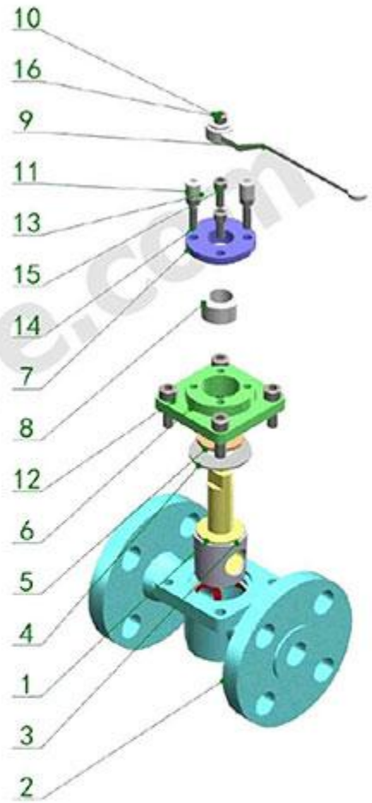

Features

F4, F46, PVDF, PP, PO, PE and other self-lubricating material bushings can be used according to the use temperature and working medium, which is well lubricated, and the friction coefficient of the sealing pair is small in the whole working process, and the plug body is flexible and has a long service life.

The design of the inlet and outlet end of the valve body and the structure of the double-groove sealing ring, the sealing specific pressure between the sealing pairs of the plug gradually changes during the rotation process, until it reaches the fully open or fully closed position, which produces sufficient sealing specific pressure and the sealing pair reaches zero leakage.

The double-channel groove sealing ring can not only make the bushing stable in the valve body without displacement, but also absorb the slight deformation of the bushing caused by the temperature difference, and at the same time produce strong friction between the bushing and the, which has the effect of automatic cleaning and improves the service life of the sealing surface.

The unique anti-lip sealing design on the top of the plunger adopts a combination of soft sealing material diaphragm and metal diaphragm and adjustment gasket to adjust the sealing pressure between the sealing surfaces, so that the plug rotates flexibly, and can ensure the sealing of the inlet and outlet ends and the middle flange connection ends.

Suitable for gas-solid with high wash ability liquid-solid phase media. Such as PVC, urea, vinegar, caustic soda production equipment, or external leakage requirements of high media, such as HF, phosgene, etc.

The medium can flow in both directions, and the installation direction is not restricted, so as to achieve online maintenance and make it more convenient to use.

Unique design to prevent static electricity, safe to fire, safe to use.

Valve Closing Action & Flow Velocity Distribution

valve fully open　　45°　　valve fully closed

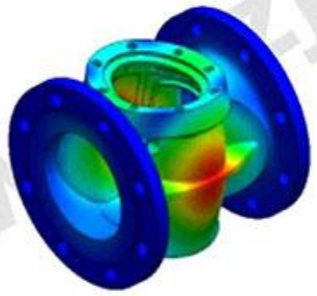

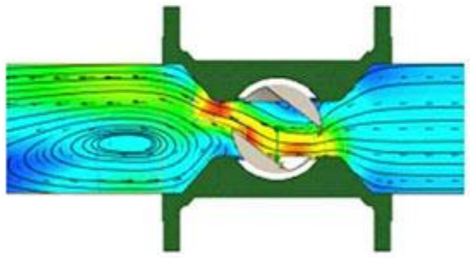

Three-way, four-way & jacket plug valves

Three-way and four-way plug valves are suitable for pipelines under various working conditions such as petroleum, chemical, pharmaceutical, fertilizer, power industry and other working conditions with pressure CLASS150-900LBS, PN1.0-16.0 and PN1.0-16.0 working temperature.

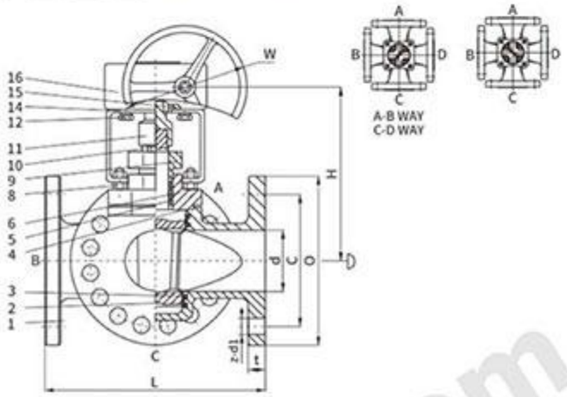

Main Sructural Features

1. The product has reasonable structure, reliable sealing, excellent performance and beautiful appearance.

2. It can be designed into various circulation forms (such as L-type, T-type, etc.) and various materials (such as cast iron, cast steel, stainless steel) according to the requirements of pipeline working conditions. Three-way and four-way plug valves with various sealing forms (such as hard seal, card sleeve seal, oil seal, etc.).

3.Part materials and flange sizes can be reasonably selected according to actual working conditions or user requirements to meet various engineering needs.

4. This series of valves can also be added with an insulation layer and used as an insulation valve.

Technical Specification	
Driving mode	wrench wheel, worm & worm gear, pneumatic, electric
Design standard	API 599, API 6D, GB/T 22130
Structure criteria	ASME B16.10, GB 12221, EN 558
Connecting flange	ASME B16.5, HB 20592, EN 1092
Test and inspection	API 598, API 6D, GB/T 13927, EN 12266

Product Performance Specification

Nominal pressure	Shell test （MPa）	Sealing test （MPa）
150LB	3.0	2.2
300LB	7.7	5.62
600LB	15.4	11.23
900LB	23.0	16.85
1500LB	37.5	27.5
1.6MPa	2.4	1.76
2.5MPa	3.75	2.75
4.0MPa	6.0	4.4
6.4MPa	9.6	7.04
10.0MPa	15.0	11.0
16.0MPa	24.0	17.6
25.0MPa	37.5	27.5

ANSI Sleeve Soft Plug Valve

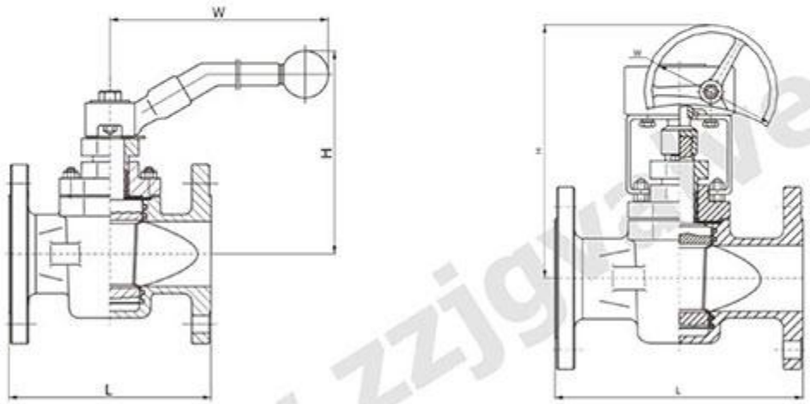

X343F/X43F-150LB															
DN	mm	15	20	25	32	40	50	65	80	100	125	150	200	250	300	350
	in	1/2	3/4	1	1 1/4	1 1/2	2	2 1/2	3	4	5	6	8	10	12	14
L		108	117	127	140	165	178	190	203	229	254	267	292	330	356	381
H		110	115	115	135	140	150	165	180	380	460	520	580	620	680	760
W		195	205	205	315	315	330	400	590	690	300	320	320	350	380	450

X343F/X43F-300LB																
DN	mm	15	20	25	32	40	50	65	80	100	125	150	200	250	300	350
	in	1/2	3/4	1	1 1/4	1 1/2	2	2 1/2	3	4	5	6	8	10	12	14
L		140	152	165	178	190	216	241	283	305	381	403	419	457	502	762
H		110	115	115	135	140	150	165	180	380	460	502	580	620	680	760
W		195	205	205	315	315	330	400	590	690	300	320	320	350	380	450

X343F/X43F-600LB																
DN	mm	15	20	25	32	40	50	65	80	100	125	150	200	250	300	350
	in	1/2	3/4	1	1 1/4	1 1/2	2	2 1/2	3	4	5	6	8	10	12	14
L		165	190	216	229	241	292	330	356	432	508	559	660	787	838	889
H		110	115	115	135	140	150	165	180	380	460	520	580	620	680	760
W		195	205	205	315	315	330	400	590	690	300	320	320	350	380	450

X343F/X43F-900LB																
DN	mm	15	20	25	32	40	50	65	80	100	125	150	200	250	300	350
	in	0.5	0.75	1	1.25	1.5	2	2.5	3	4	5	6	8	10	12	14
L		216	229	254	279	305	368	419	381	457	559	610	737	838	965	1029
H		110	115	115	135	140	150	165	180	380	460	520	580	620	680	760
W		195	205	205	315	315	330	400	590	690	300	320	320	350	380	450

DIN Sleeve Soft Plug Valve

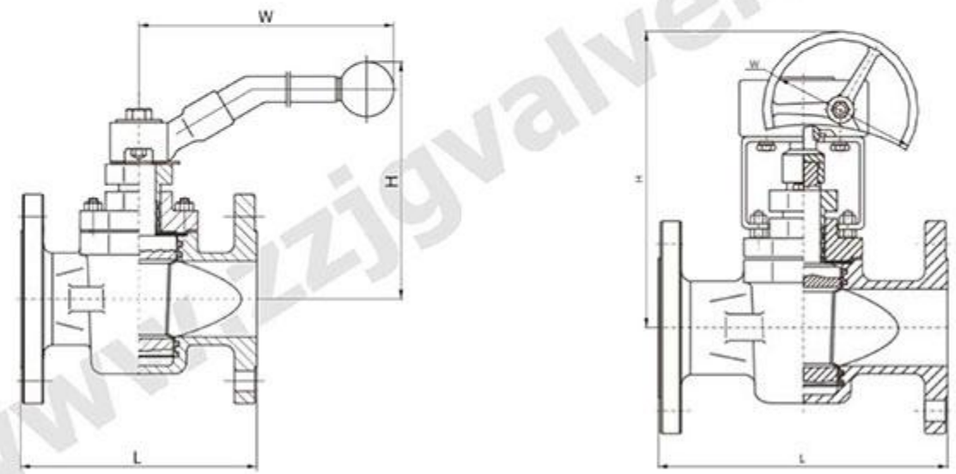

X343F/X43F-16/25															
DN-mm	15	20	25	32	40	50	65	80	100	125	150	200	250	300	350
L	130	150	160	180	200	230	290	310	350	400	480	600	730	850	980
H	150	155	160	180	190	200	220	230	380	460	520	580	620	680	740
W	195	205	205	315	315	330	400	590	690	300	320	320	350	380	380

X343F/X43F-40															
DN-mm	15	20	25	32	40	50	65	80	100	125	150	200	250	300	350
L	130	150	160	18	200	230	290	310	350	400	480	600	730	850	980
H	150	155	160	180	190	200	220	230	380	460	520	580	620	680	740
W	195	205	205	315	315	330	400	590	690	300	320	320	350	380	380

X343F/X43F-64															
DN-mm	15	20	25	32	40	50	65	80	100	125	150	200	250	300	350
L	130	150	160	180	200	230	290	310	350	400	480	600	730	850	980
H	150	155	160	180	190	200	220	230	380	460	520	580	620	680	740
W	195	205	205	315	315	330	400	590	690	300	320	320	350	380	380

Sleeve Plug Valve

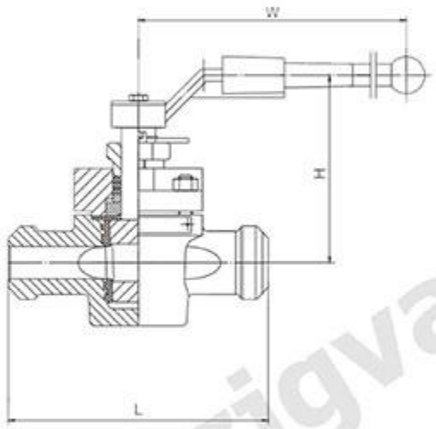

Butt Weld End ASME B16.25-2017									X343F/X43F-150LB
Nominal bore	Pipe number	Outer diameter of welding end		Nominal bore diameter		Machined inner diameter		Pipe wall thickness	
		inch	mm	inch	mm	inch	mm	inch	mm
2-1/2	40	2.88	73.0	2.469	62.6	2.479	62.79	0.203	5.0
	80			2.323	59.0	2.351	59.72	0.276	7.1
	160			2.125	54.0	2.178	55.32	0.375	10
	XXS			1.771	45.0	1.868	47.45	0.552	14.0
3	40	3.5	88.9	3.068	77.9	3.081	78.26	0.126	5.6
	80			2.900	73.7	2.934	74.52	0.300	8
	160			2.624	66.7	2.692	68.38	0.438	11
	XXS			2.300	58.5	2.409	61.19	0.600	15
3-1/2	40	4.0	101.6	3.548	90.2	3.564	90.53	0.226	5.6
	80			3.364	85.4	3.402	86.41	0.318	8
4	40	4.5	114.3	4.026	102.3	4.044	102.72	0.237	5.9
	80			3.826	97.1	3.869	98.27	0.337	8.8
	120			3.624	92.1	3.692	93.78	0.438	11
	160			3.438	87.3	3.530	89.66	0.531	14.2
	XXS			3.512	80.1	3.279	83.29	0.674	17
5	40	5.56	139.7	5.047	128.1	5.070	128.78	0.258	6.3
	80			4.813	122.3	4.866	126.6	0.375	10
	120			4.563	115.9	4.647	118.03	0.500	12.5
	160			4.313	109.5	4.428	112.47	0.625	16
	XXS			4.063	103.3	4.209	106.91	0.750	19.0
6	40	6.62	168.3	6.065	154.1	6.094	154.79	0.280	7.1
	80			5.761	146.3	5.828	148.03	0.432	11.0
	120			5.501	139.7	5.600	142.24	0.562	14.2
	160			5.187	131.7	5.326	135.28	0.719	17.5
	XXS			4.897	124.5	5.072	128.83	0.864	20
8	40	8.62	219.1	7.981	202.7	8.020	203.71	0.322	8
	60			7.813	198.5	7.873	199.97	0.406	10
	80			7.625	193.7	7.709	195.81	0.500	12.5
	100			7.437	188.9	7.544	191.62	0.594	16
	120			7.187	182.5	7.326	186.08	0.719	17.5
	140			7.001	177.9	7.163	181.94	0.812	20
	160			6.875	174.7	7.053	179.15	0.875	22.2
	XXS			6.813	173.1	6.998	177.75	0.906	22.5

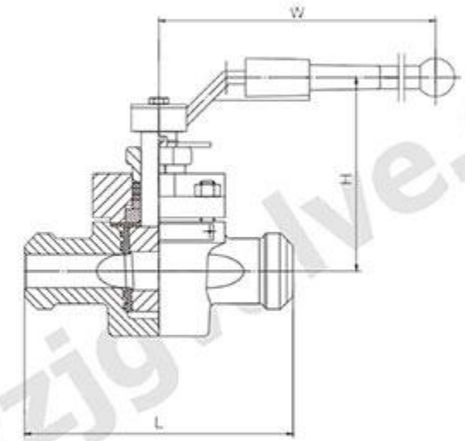

Butt Weld End ASME B16.25-2017									X343F/X43F-150LB
Nominal bore	Pipe number	Outer diameter of welding end		Nominal bore diameter		Machined inner diameter		Pipe wall thickness	
		inch	mm	inch	mm	inch	mm	inch	mm
10.75	40	10.75	273	10.02	254.4	9.834	255.78	0.365	8.8
	60			9.75	247.6	9.834	249.78	0.5	12.5
	80			9.562	242.8	9.670	245.62	0.594	16
	100			9.312	236.4	9.451	240.06	0.719	17.5
	120			9.062	230.2	9.232	234.49	0.844	22.2
	140			8.75	222.2	8.959	227.56	1.000	25
	160			8.5	215.8	8.740	222.00	1.125	28
12.75	STD	12.75	323.9	12.00	304.8	12.053	306.15	0.375	9.5
	40			11.938	303.2	11.999	304.77	0.406	10
	XS			11.750	298.4	11.834	300.58	0.500	12.7
	60			11.626	295.2	11.725	297.82	0.562	14.2
	80			11.374	288.8	11.505	282.23	0.688	17.5
	100			11.062	281.0	11.232	285.29	0.844	22.2
	120			10.750	273.0	10.959	278.36	1.000	25
	140			10.500	266.6	10.740	272.80	1.125	28
	160			10.126	257.2	10.413	264.49	1.312	32
14.00	STD	14.00	355.60	13.250	336.6	13.303	337.90	0.375	9.5
	40			13.124	333.4	13.192	355.08	0.438	11
	XS			13.000	330.2	13.084	332.33	0.500	12.7
	60			12.812	325.4	12.920	32817	0.594	16
	80			12.500	317.6	12.646	321.21	0.750	20
	100			12.124	308.0	12.318	312.88	0.938	25.8
	120			11.812	300.0	12.044	305.92	1.094	28
	140			11.500	2920	11.771	298.98	1.250	32
	160			11.188	284.2	11.498	292.05	1.406	36

API Pressure Balance Plug Valve

Features

According to ANSI, API Pressure Balance Plug Valve is applicable to the cutting and connection of pipelines medium and is used in various industries such as petroleum, chemical industry, pharmacy, chemical fertilizer, electric power industry etc. Its system pressure ranges from Class150 to Class900 and working temperature ranges from -29°C to 180°C

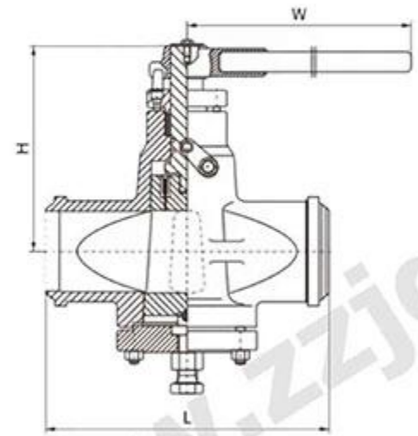

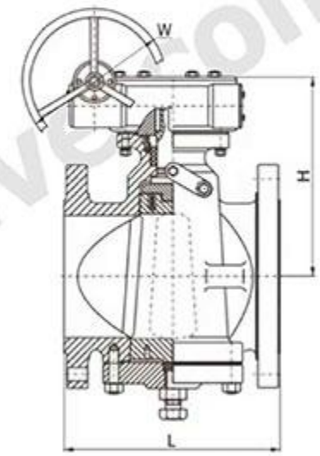

Main Parts

No.	Part
1	Body
2	Plug
3	Stem
4	Adjustment Plate
5	Adjustment Plate Center
6	Adjustment Screw
7	Gasket
8	Gasket Plate A
9	Gasket Plate B
10	Lower Cover Plate
11	Connection Plate
12	Centering Ball
13	Thrust Bearing
14	Gland
15	Packing
16	O-Ring
17	Stud
18	Heavy Hex Nut
19	SHCS
20	Ball
21	Greae Fitting, GBH
22	Ball Check
23	Packing Injection Fitting

API Pressure Balance Plug Valve Technical Parameters

X47W/X347W-150LB

Size	mm	15	20	25	32	40	50	65	80	100	125	150	200	250	300	350
	in	1/2	3/4	1	11/4	11/2	2	21/2	3	4	5	6	8	10	12	14
L		108	117	127	140	165	178	190	203	229	254	267	292	330	356	381
H		180	180	185	200	214	215	250	270	300	340	365	400	450	510	590
W		400	400	500	500	600	600	820	820	300	300	320	320	350	380	380

X47W/X347W-300LB

Size	mm	15	20	25	32	40	50	65	80	100	125	150	200	250	300	350
	in	1/2	3/4	1	11/4	11/2	2	21/2	3	4	5	6	8	10	12	14
L		140	152	165	178	190	216	241	283	305	381	403	419	457	502	762
H		180	180	185	200	210	215	250	270	300	340	365	400	450	510	590
W		400	400	500	600	600	820	1000	1000	300	300	320	320	350	380	380

X47W/X347W-600LB

Size	mm	15	20	25	32	40	50	65	80	100	125	150	200	250	300	350
	in	1/2	3/4	1	11/4	11/2	2	21/2	3	4	5	6	8	10	12	14
L		165	190	216	229	241	292	330	356	432	508	559	660	787	838	889
H		180	180	185	200	210	215	250	270	300	340	365	400	450	510	590
W		400	400	500	500	600	600	820	820	300	300	320	320	350	380	380

X47W/X347W-900LB

Size	mm	15	20	25	32	40	50	65	80	100	125	150	200	250	300	350
	in	1/2	3/4	1	11/4	11/2	2	21/2	3	4	5	6	8	10	12	14
L		216	229	254	279	305	368	419	381	457	559	610	737	838	965	1029
H		180	180	185	200	210	215	250	270	300	340	365	400	450	510	590
W		400	400	500	600	600	820	1000	1000	300	300	320	320	350	380	380

Lifting Plug Valve

Features

According to ANSI, flange-connection lifting plug valve is applicable to the cutting and connection of medium in the pipelines and is used in various industries such as petroleum, chemical industry, pharmacy, chemical fertilizer, power industry, etc., under pressure of Class150~1500, and working temperature ranges from -29°C to 180°C.

Main Parts

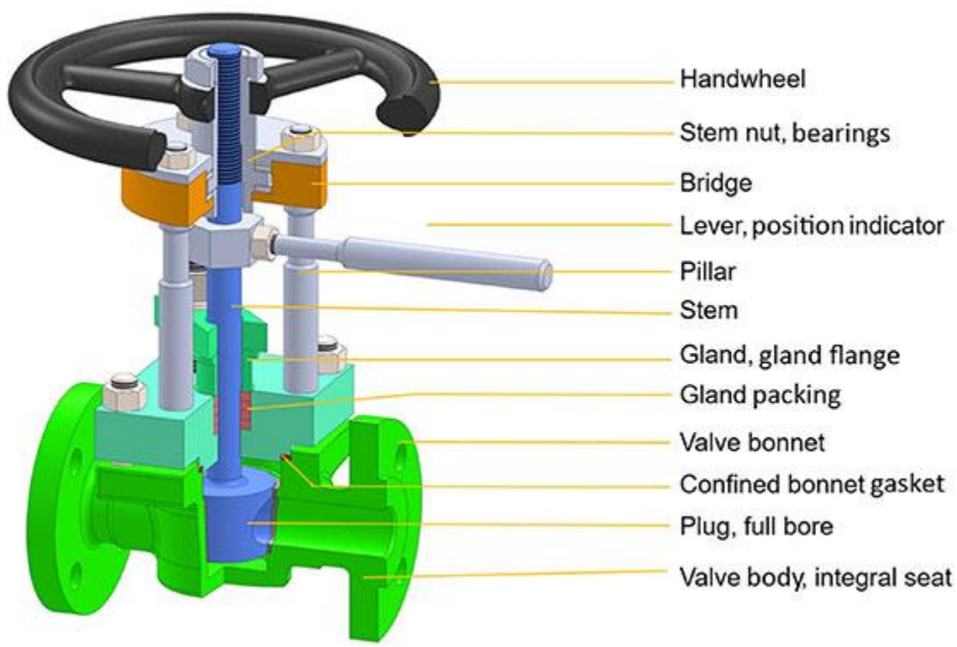

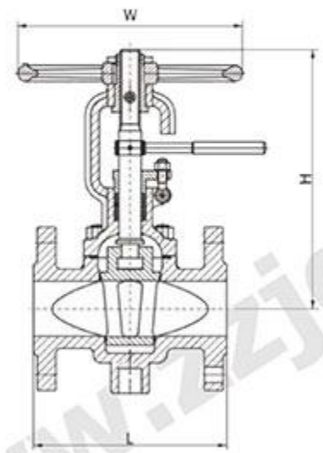

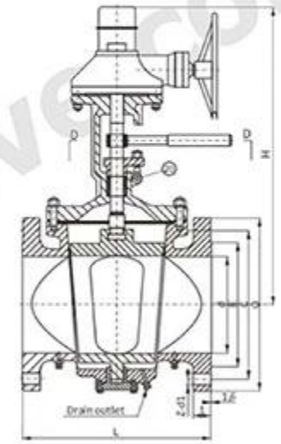

Lifting Plug Valve Technical Parameters																
X543W/X43W-150LB																
Size	mm	15	20	25	32	40	50	65	80	100	125	150	200	250	300	350
	in	1/2	3/4	1	11/4	11/2	2	21/2	3	4	5	6	8	10	12	14
L		108	117	127	140	165	178	190	203	229	254	267	292	330	356	381
H		190	195	225	260	280	310	250	395	300	470	535	590	630	680	720
W		180	180	180	220	220	220	250	250	300	350	350	400	500	500	600

X543W/X43W-300LB																
Size	mm	15	20	25	32	40	50	65	80	100	125	150	200	250	300	350
	in	1/2	3/4	1	11/4	11/2	2	21/2	3	4	5	6	8	10	12	14
L		140	152	165	178	190	216	241	283	305	381	403	419	457	502	762
H		190	195	225	260	280	310	340	395	435	470	535	590	630	680	720
W		180	180	180	220	220	220	250	250	300	350	350	400	500	500	600

X543W/X43W-600LB																
Size	mm	15	20	25	32	40	50	65	80	100	125	150	200	250	300	350
	in	1/2	3/4	1	11/4	11/2	2	21/2	3	4	5	6	8	10	12	14
L		165	190	216	229	241	292	330	356	432	508	559	660	787	838	889
H		190	195	225	260	280	310	340	395	435	470	535	590	630	680	720
W		180	180	180	220	220	220	250	250	300	350	350	400	500	500	600

X543W/X43W-900LB																
Size	mm	15	20	25	32	40	50	65	80	100	125	150	200	250	300	350
	in	1/2	3/4	1	11/4	11/2	2	21/2	3	4	5	6	8	10	12	14
L		216	229	254	279	305	368	419	381	457	559	610	737	838	965	1029
H		190	195	225	260	280	310	340	395	435	470	535	590	630	680	720
W		180	180	180	220	220	220	250	250	300	350	350	400	500	500	600

Elastic Seat Plug Valve

Overview

Elastic seat sealed plug valve provides reliable applications and offers availability and long service life for various medium, high-speed, corrosive fluid and fluid with impurity.

Features

1. Elastic seat sealed structure: the sealing structure of elastic cock and corrosion-resistant seat performs the reliable sealing and zero leakage of the valve. It overcomes the shortage of easily being leaked occurred in the metal seal of traditional plug valve.
2. Elastic eccentric sealing design: The operating force is acted on the very short stroke of touching area or disengage from the sealing face of the valve.

Besides, it quickly reduces when the sealing pressure reduces, there is no wearing on the sealing face and automatic compensation is offered by bottom spring. It solves the problems that traditional plug valve and ball valve occur serious wearing on the sealing face under large continuous operating force because the full travel of sealing face is forcibly squeezed.

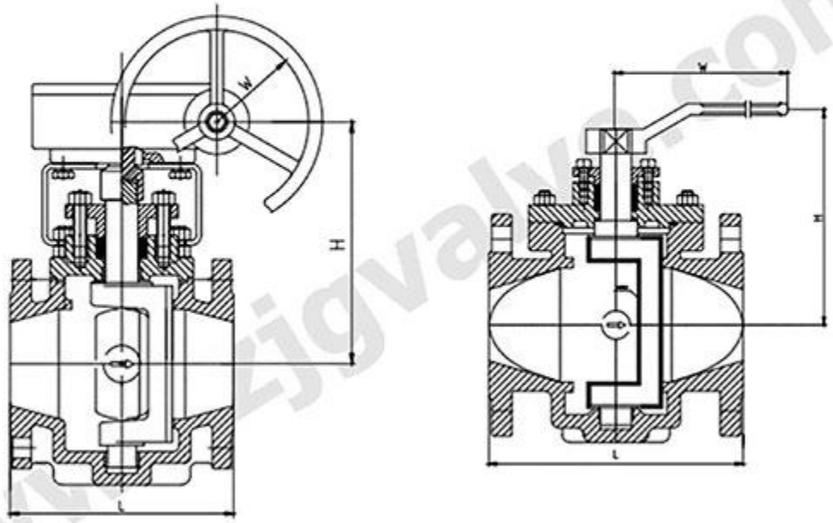

Elastic Seat Plug Valve Technical Parameters																
ECC-X43X-150LB																
Size	mm	15	20	25	32	40	50	65	80	100	125	150	200	250	300	350
	in	1/2	3/4	1	11/4	11/2	2	21/2	3	4	5	6	8	10	12	14
L-RF		108	117	127	140	165	178	190	203	229	254	267	292	330	356	381
L-BW		152	178	208	216	229	267	305	330	356	381	394	457	533	610	686
H		59	63	75	95	107	142	152	178	252	272	342	398	495	580	625
W		400	400	500	500	600	600	820	820	300	300	320	320	350	380	380

ECC-X43X-300LB																
Size	mm	15	20	25	32	40	50	65	80	100	125	150	200	250	300	350
	in	1/2	3/4	1	11/4	11/2	2	21/2	3	4	5	6	8	10	12	14
L-RF		140	152	165	178	190	216	241	283	305	381	403	419	457	502	762
L-BW		152	178	203	216	229	267	305	330	356	381	457	521	559	635	762
H		59	63	75	95	107	142	152	178	252	272	342	398	495	580	625
W		400	400	500	600	600	820	1000	1000	300	300	320	320	350	380	380

Double Block and Bleed (DBB) Plug Valve

Features

1. During the valve's opening/closing process, there is no contact between the sealing surfaces of the valve body and the vane, so the sealing surfaces suffer neither friction nor wear, contributing to the valve's long service life and small opening/closing torque.

2. For the valve's maintenance, its bottom cover is removed to replace the vane pair, thus it is very easy for the maintenance.

3. The valve's body and plug are full-bore so that the medium can flow through the valve without any flow resistance and it's also possible to clean the pipeline to overcome the shortcomings of the reduced port valve.

4. The valve is provided with an automatic bleed device (optional) which can prevent the abnormal pressure rise of the valve cavity and check the valve's effect after the valve is completely closed.

5. The valve's cavity is plated with hard chrome and the sealing area is hard and smooth.

6.The elastic seal on the vane is made of the fluorine rubber and molded and formed in a groove of the vane surface. The fireproof metal-to-metal seal is used as the backing of the elastic seal.

7. The valve's opening/closing indicator is in sync with the opening/closing position and can accurately display the valve's opening/closing status.

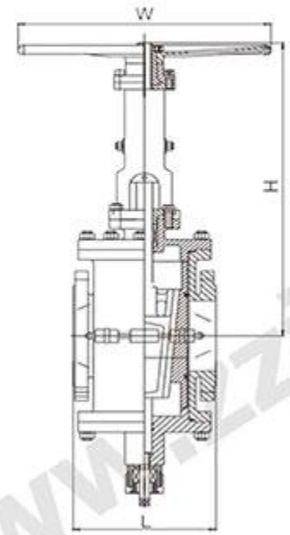

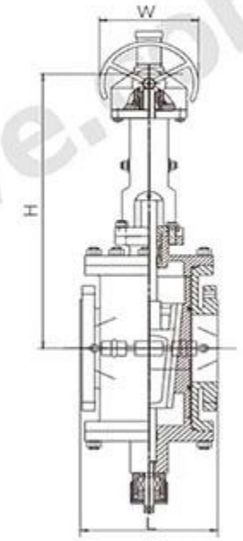

Double Block and Bleed (DBB) Plug Valve Reduced Bore Technical Parameters																
TG4X-150LB																
Size	mm	15	20	25	32	40	50	65	80	100	125	150	200	250	300	350
	in	1/2	3/4	1	11/4	11/2	2	21/2	3	4	5	6	8	10	12	14
L		108	117	127	140	165	178	190	203	229	254	267	292	330	356	381
H		230	260	300	340	380	435	460	490	525	570	625	700	780	870	980
W		120	140	140	180	200	220	260	280	300	340	400	450	450	500	500
TG4X-300LB																
Size	mm	15	20	25	32	40	50	65	80	100	125	150	200	250	300	350
	in	1/2	3/4	1	11/4	11/2	2	21/2	3	4	5	6	8	10	12	14
L		140	152	165	178	190	216	241	283	305	381	403	419	457	502	762
H		230	260	300	340	380	435	460	490	525	570	625	700	780	870	980
W		120	140	140	180	200	220	260	280	300	340	400	450	450	500	500
TG4X-600LB																
Size	mm	15	20	25	32	40	50	65	80	100	125	150	200	250	300	350
	in	1/2	3/4	1	11/4	11/2	2	21/2	3	4	5	6	8	10	12	14
L		165	190	216	229	241	292	330	356	432	508	559	660	787	838	889
H		230	260	300	340	380	435	460	490	525	570	625	700	780	870	980
W		120	140	140	180	200	220	260	280	300	340	400	450	450	500	500

Ball Valve

Trunnion Mounted Ball Valve

Flanged Floating Ball Valve

Flanged Eccentric Half Ball Valve

Welded Eccentric Half Ball Valve

Top Entry Eccentric Half Ball Valve

Double Eccentric V-type Ball Valve

Trunnion Mounted Ball Valve

Overview

ZZJG Valve manufactures a comprehensive range of Trunnion Mounted Ball Valves in sizes up to 56" (1400 mm) . The valves are offered in a variety of body styles, materials, trims and actuation options to address critical services in hydrocarbon, power and allied industries.

ZZJG Trunnion Mounted Ball Valves meet the requirements of ANSI, API, DIN, JIS, ISO, EN, GB.

We have more than 40 years professional valve manufacturer. Our products are exported to more than 72 countries and widely used in petroleum, chemical industry, metallurgy, electric power, water supply, coal gas, natural gas and other industries.We are promise to have high reliability, excellent quality, fast service, online support.

Features

1.Effortless operation: The medium pressure acts on the ball and is all transmitted to the hoist bearing. The ball will not move relative to its position. The valve seat seals at both ends are evenly stressed and the operating torque is low.

Trunnion Mounted Ball Valve

2. It adopts elastically pre-riveted movable metal valve seat structure, which can be applied to high temperature, high pressure and various medium pipelines.

3. It can be designed according to customer requirements and can be suitable for media containing particles, slurry and other media.

4. Applicable medium: Clean water, sewage, sea water, acid and alkali liquids, slurry, steam, oil, other granular medium.

Applications

Widely used in medium pipelines such as food, medicine, petroleum, cemical industry, natural gas, steel, environmental protection and paper-making.

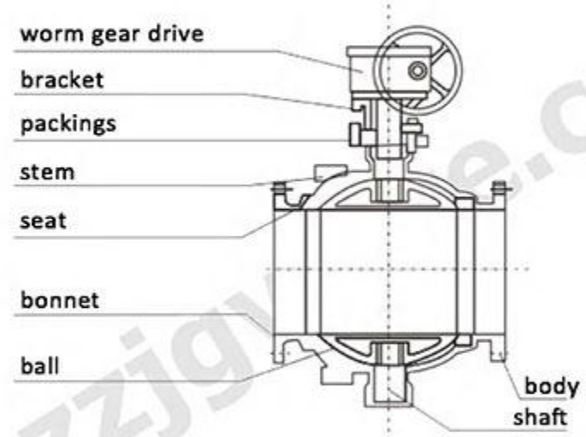

Parts	Material
Body	WCB, CF8, CF3, CF8M,CF3M
Core	WCB, CF8, CF3, CF8M,CF3M+nickel-based alloy
Shaft	20Cr13, 304, 316, 17-4PH
Seat	A105, 304, 316+nickel-based alloy

Technical Performance Specifications

Nominal pressure (PN)	Maximum working pressure at room temperature	Shell test	Air seal test pressure	High pressure seal test pressure
1.6	1.6	2.4	0.6	1.76
2.5	2.5	3.8	0.6	2.75
4	4	6	0.6	4.4
6.4	6.4	9.6	0.6	7.1
10	10	15	0.6	11
Class 150	2	3	0.6	2.2
Class 300	5	7.5	0.6	5.5
Class 600	10	15	0.6	11

Main Design & Manufacturing Standards

Design standard	GB/T 12237	Steel ball valves for petroleum, petrochemical and allied industries
	ISO 17292:2004	Metal ball valves for petroleum, petrochemical and allied industries Petroleum
	API 608	Metal ballvalves-flanged, threaded, and welding ends, NEQ
Inspection and testing	GB/T 13927	Industrial valves - Pressure testing
	ISO 5208 :2015	Industrial valves - Pressure testing of metallic valves, MOD
	API 598	Valve Inspection and Testing
Flange standard	JB/T 79.1~4	Raised-face integral cast steel pipe flange
	ASME B16.5	Pipe Flanges and Flanged Fittings NPS 112 Through NPS 24 Metric/Inch Standard
Structure length standard	GB/T 12221	Metal valves - Face to face, end to end, center toface and center to end dimensions
	ISO 5752:1982	Metal valves for use in flanged pipe systems-Face-to-face and center-to-face dimensions, MOD
	ASME B16.10	Face-to-Face and End-to-End Dimensions of Valves

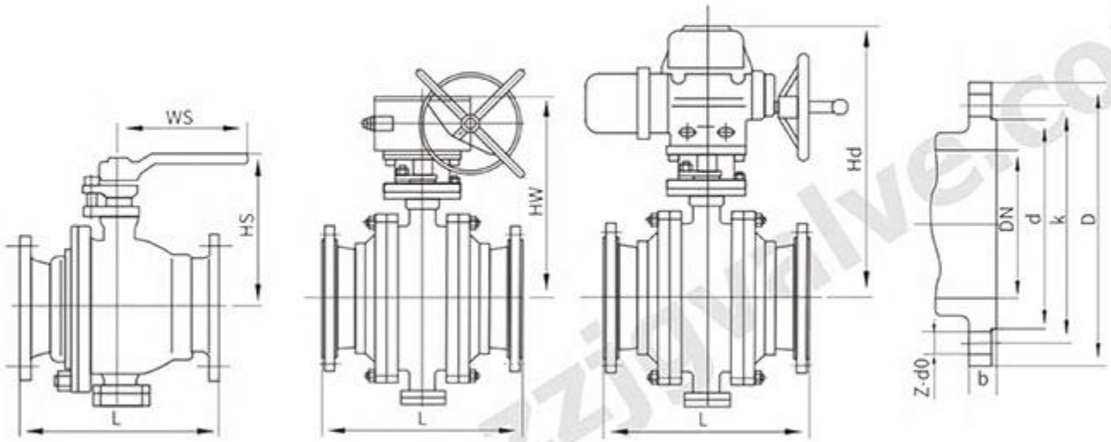

Q47F/H Main Dimensions (mm) PN16										
DN	L	D	K	d	b	Z-d0	Ws	Hs	Hw	Hd
50	203	160	125	100	16	4-Φ18	260	150	-	-
65	222	180	145	120	18	4-Φ18	350	180	-	-
80	241	195	160	135	20	8-Φ18	500	195	-	-
100	305	215	180	155	20	8-Φ18	650	245	310	420
125	356	245	210	185	22	8-Φ18	800	270	330	440
150	394	280	240	210	24	8-Φ23	1000	305	470	540
200	457	335	295	265	26	12-Φ23	-	-	520	580
250	533	405	355	320	30	12-Φ25	-	-	610	640
300	610	460	410	375	30	12-Φ25	-	-	650	690
350	686	520	470	435	34	16-Φ25	-	-	740	785
400	762	580	525	485	36	16-Φ30	-	-	795	830
450	864	640	585	545	40	20-Φ30	-	-	860	910
500	914	705	650	608	44	20-Φ34	-	-	945	990
600	1067	840	770	718	48	20-Φ41	-	-	1040	1090
700	1245	910	840	788	50	24-Φ41	-	-	1150	1210
800	1372	1020	950	898	52	24-Φ41	-	-	1280	1340
900	1524	1120	1050	998	54	28-Φ41	-	-	1430	1510
1000	1753	1255	1170	1110	56	28-Φ48	-	-	1580	1640
1200	2032	1485	1390	1325	58	32-Φ54	-	-	1810	1910
1400	2300	1685	1590	1525	60	36-Φ54	-	-	2010	2115

Q47F/H Main Dimensions (mm)										
DN	L	D	K	d	b	Z-d0	Ws	Hs	Hw	Hd
PN25										
50	203	160	125	100	20	4-Φ18	260	150	-	-
65	222	180	145	120	22	8-Φ18	350	180	-	-
80	241	195	160	135	22	8-Φ18	500	195	-	-
100	305	230	190	160	24	8-Φ23	650	245	310	420
125	356	270	220	188	28	8-Φ25	800	270	330	440
150	394	300	250	218	30	8-Φ25	1000	305	470	555
200	457	360	310	278	34	12-Φ25	-	-	540	595
250	533	425	370	332	36	12-Φ30	-	-	630	655
300	610	485	430	390	40	16-Φ30	-	-	650	705
350	686	550	490	448	44	16-Φ34	-	-	740	795
400	762	610	550	505	48	16-Φ36	-	-	795	830
450	864	660	600	555	50	20-Φ36	-	-	860	910
500	914	730	660	610	52	20-Φ41	-	-	945	990
600	1067	840	770	718	56	20-Φ41	-	-	1040	1090
700	1245	955	875	815	60	24-Φ48	-	-	1150	1210
800	1372	1070	990	930	64	24-Φ48	-	-	1305	1340
900	1524	1180	1090	1025	66	28-Φ54	-	-	1505	1600
1000	1753	1305	1210	1140	68	28-Φ58	-	-	1615	1705
1200	2032	1525	1420	1350	72	32-Φ58	-	-	1925	2035
1400	2300	1750	1640	1560	78	36-Φ65	-	-	2110	2185
PN40										
50	216	160	125	100	20	4-Φ18	260	150	-	-
65	241	180	145	120	22	8-Φ18	350	180	-	-
80	283	195	160	135	22	8-Φ18	500	195	-	-
100	305	230	190	160	24	8-Φ23	800	250	320	430
125	381	270	220	188	28	8-Φ25	1000	280	340	450
150	403	300	250	218	30	8-Φ25	1000	360	485	590
200	502	375	320	282	38	12-Φ30	-	-	580	640
250	568	445	385	345	42	12-Φ34	-	-	665	680
300	648	510	450	408	46	16-Φ34	-	-	760	810
350	762	570	510	465	52	16-Φ36	-	-	820	890
400	838	655	585	535	58	16-Φ41	-	-	860	940
450	914	680	610	560	60	20-Φ41	-	-	930	1010
500	991	755	670	612	62	20-Φ48	-	-	980	1130
600	1143	890	795	730	62	20-Φ54	-	-	1040	1090
700	1346	995	900	835	68	24-Φ54	-	-	1150	1210
800	1524	1135	1030	960	76	24-Φ58	-	-	1305	1340
900	1727	1270	1168	1022	105	32-Φ54	-	-	1505	1600
1000	1880	1238	1156	1086	114	32-Φ44	-	-	1615	1705
1200	2184	1467	1372	1302	133	32-Φ51	-	-	1925	2035
PN64										
50	292	175	135	105	26	4-Φ23	260	160	-	-
65	330	200	160	130	28	8-Φ23	350	180	-	-
80	356	210	170	140	30	8-Φ23	500	220	-	-
100	406	250	200	168	32	8-Φ25	800	250	320	430
125	508	295	240	202	36	8-Φ30	1000	295	340	450
150	495	340	280	240	38	8-Φ34	1200	360	485	590
200	597	405	345	300	44	12-Φ36	-	-	580	650
250	673	470	400	352	48	12-Φ41	-	-	665	720
300	762	530	460	412	54	16-Φ41	-	-	760	840
350	826	595	525	475	60	16-Φ41	-	-	820	930
400	902	670	585	525	66	16-Φ48	-	-	870	990
500	1054	800	705	640	70	20-Φ54	-	-	995	1150
600	1232	930	820	750	76	20-Φ58	-	-	1100	1180
700	1397	1035	940	800	95	28-Φ51	-	-	1180	1230
800	1651	1149	1054	914	108	28-Φ54	-	-	1345	1385
900	1880	1270	1168	1022	114	32-Φ54	-	-	1550	1655
1000	1981	1270	1175	1092	133	32-Φ51	-	-	1675	1745
1200	2311	1511	1403	1308	152	28-Φ60	-	-	1945	2075

Flanged Floating Ball Valve

Overview

The ball of the flanged floating ball valve is floating. Under the action of medium pressure, the ball can produce a certain displacement and press tightly against the sealing surface of the outlet end to ensure the sealing of the outlet end.

The floating ball valve has a simple structure and good sealing performance, but all the load of the working medium on the ball is transferred to the outlet sealing ring. Therefore, it is necessary to consider whether the sealing ring material can withstand the working load of the ball medium. When subjected to higher pressure impact , the sphere may shift.

Features

Floating soft seal stainless steel ball valves are used on various pipelines from PN16 to PN64 to cut off or connect the media in the pipelines. They are made of different materials can be applied to water, steam, oil, liquefied gas, natural gas, coal gas, acetic acid, oxidizing media, urea and other media.

a. Among various valves, the ball valve has the smallest flow resistance. When the full-diameter ball valve is opened, the diameters of the ball channel, valve body channel and connecting pipe are equal and become one diameter, and the medium can flow through almost without resistance.

b. The ball valve can be fully closed and fully opened by rotating 90°, opening and closing quickly. Compared with gate valves and globe valves of the same specifications, ball valves are small in size, light in weight, and easy to install in pipelines.

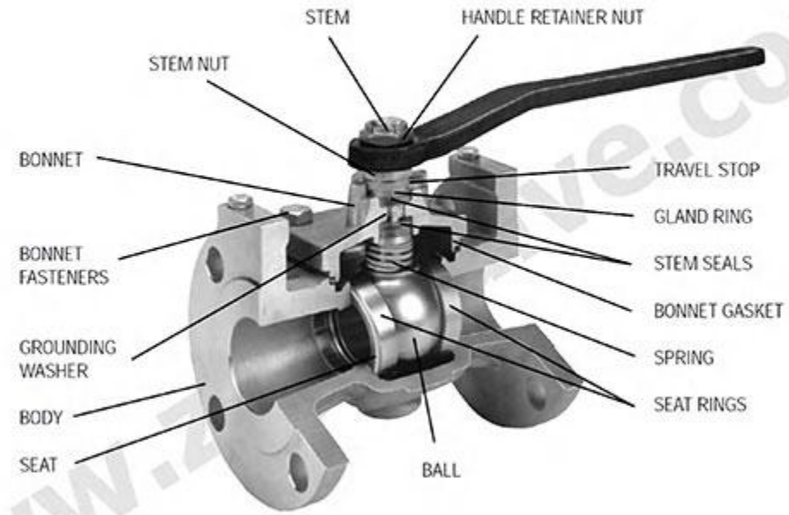

Main Parts Materials						
Part	Material					
body	A351 CF8C	ZG0Cr18Ni10Ti	A351 CF8	A351 CF8M	A351 CF3	A351 CF3M
bonnet	A351 CF8C	ZG0Cr18Ni10Ti	A351 CF8	A351 CF8M	A351 CF3	A351 CF3M
ball	A182 F347	A182 F321	A182 F304	A182 F316	A182 F304L	A182 F316L
seat	PTFE/STL	PTFE/STL	PTFE/STL	PTFE/STL	PTFE/STL	PTFE/STL
stem	0Cr18Ni10Ti	0Cr18Ni10Ti	06Cr19Ni10	06Cr17Ni12Mo2	022Cr19Ni10	022Cr17Ni12Mo2
gasket	PTFE/304+graphite	PTFE/304+graphite	PTFE/304+graphite	PTFE/304+graphite	PTFE/304+graphite	PTFE/304+graphite
bolt	A193 B8	A193 B8	A193 B8	A193 B8M	A193 B8	A193 B8M
nut	A194 8	A194 8	A194 8	A194 8M	A1948	A194 8M
Applicable temperature	soft seal-196~250°C ; metal seal-196~425°C					
Applicable medium	Nitric acid weakly corrosive media					

Main Design & Manufacturing Standards		
Design standard	GB/T 12237	Steel ball valves for petroleum, petrochemical and allied industries
	ISO 17292:2004	Metal ball valves for petroleum, petrochemical and allied industries Petroleum
Inspection and testing	GB/T 13927	Industrial valves - Pressure testing
	ISO 5208 :2015	Industrial valves - Pressure testing of metallic valves, MOD
Flange standard	GB/T 9113	Integral steel pipe flanges
	HG/T 20592	Steel pipe flanges (PN designated)
Structure length standard	GB/T 12221	Metal valves - Face to face, end to end, center toface and center to end dimensions
	ISO 5752:1982	Metal valves for use in flanged pipe systems-Face-to-face and center-to-face dimensions, MOD
	JB 1686	Ball valve structure length
Pressure and temperature	GB/T 12224	General requirements for industrial steel valves

Flanged Floating Ball Valve

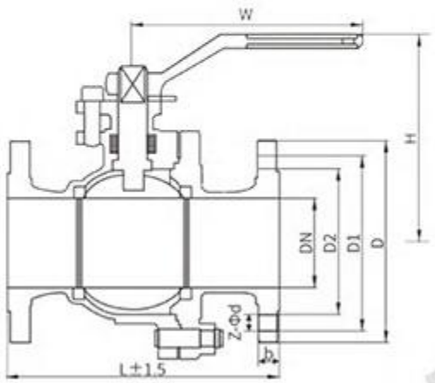

Q41F

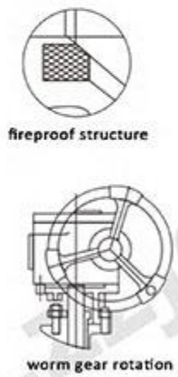

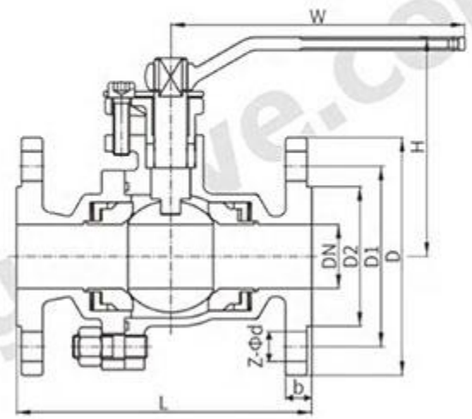

Q41H

Q41F/H Main Dimensions (mm) PN16								
DN	L	D	D1	D2	b	Z-Φd	H	W
15	130	95	65	45	14	4-Φ14	78	130
20	130/140	105	75	55	14	4-Φ14	84	130
25	140/150	115	85	65	14	4-Φ14	95	160
32	165	135/140	100	78	16	4-Φ18	150	160
40	165/180	145/150	110	85	16	4-Φ18	150	180
50	203/200	160/165	125	100	16	4-Φ18	170	200
65	222/220	180/185	145	120	18	4-Φ18	195	240
80	241/250	195/200	160	135	20	8-Φ18	215	240
100	305/280	215/220	180	155	20	8-Φ18	250	280
125	356/320	245/250	210	185	22	8-Φ18	265	300
150	394/360	280/285	240	210	24	8-Φ23	270	300
200	400/457	335/340	295	265	26	12-Φ23	330	350
250	533	405	355	320	30	12-Φ26	450	400
300	610	460	410	375	30	12-Φ26	540	500

Q41F/H Main Dimensions (mm)								
DN	L	D	D1	D2	b	Z-Φd	H	W
PN25								
15	130	95	65	45	16	4-Φ14	103	130
20	130/140	105	75	55	16	4-Φ14	112	130
25	140/150	115	85	65	16	4-Φ14	123	160
32	165	135/140	100	78	18	4-Φ18	150	160
40	165/180	145/150	110	85	18	4-Φ18	156	180
50	200/203	160/165	125	100	20	4-Φ18	172	200
65	220/222	180/185	145	120	22	8-Φ18	197	240
80	241/250	195/200	160	135	22	8-Φ18	222	240
100	280/305	230/235	190	160	24	8-Φ23	253	280
125	320/356	270	220	188	28	8-Φ25	275	300
150	360/394	300	250	218	30	8-Φ25	286	300
200	400/457	360	310	278	34	12-Φ25	340	350
250	533	425	370	332	36	12-Φ30	470	400
PN40								
15	140/130	95	65	45	16	4-Φ14	103	130
20	152/140	105	75	55	16	4-Φ14	112	130
25	165/150	115	85	65	16	4-Φ14	123	160
32	178/180	135/140	100	78	18	4-Φ18	150	160
40	190/200	145/150	110	85	18	4-Φ18	156	180
50	216/220	160/165	125	100	20	4-Φ18	172	200
65	241/250	180/185	145	120	22	8-Φ18	197	240
80	283/280	195/200	160	135	22	8-Φ18	222	240
100	305/320	230/235	190	160	24	8-Φ23	253	280
125	381/400	270	220	188	28	8-Φ25	275	300
150	403/400	300	250	218	30	8-Φ25	286	300
200	502/550	375	320	282	38	12-Φ30	340	350
250	568	445/450	385	345	42	12-Φ34	470	400
PN64								
15	140	105	75	55	18	4-Φ14	105	130
20	150	125/130	90	68	20	4-Φ18	125	130
25	180	135/140	100	78	22	4-Φ18	135	160
32	200	150/155	110	82	24	4-Φ23	150	160
40	220	165/170	125	95	24	4-Φ23	165	240
50	292/250	175/180	135	105	26	4-Φ23	175	240
65	330/280	200/205	160	130	28	8-Φ23	200	280
80	356/320	210/215	170	140	30	8-Φ23	210	300
100	432/360	250	200	168	32	8-Φ25	250	300
125	508/455	295	240	202	36	8-Φ30	295	350
150	495	340/345	280	240	38	8-Φ34	340	400

High Temperature Welding Ball Valve

1.Fully welded body.
2.Anti-static design.
3.Range of working temperature: 0℃~540℃.
4.Small operating torque.
5.High quality sealing conditions no leakage.
6. Fire safe to API 607.
7. Underground & extended stem option.
8. Low emission packing.
9. Emergency sealant injection.
10. Medium: clean water, sewage, sea water, acid and alkali liquids, slurry, steam, oil, containing granular medium.

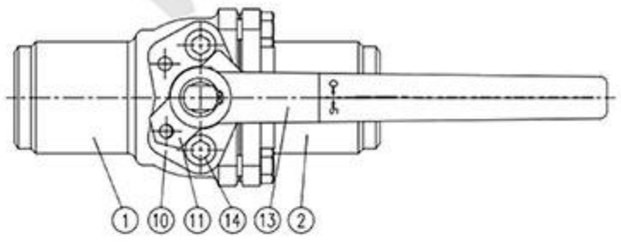

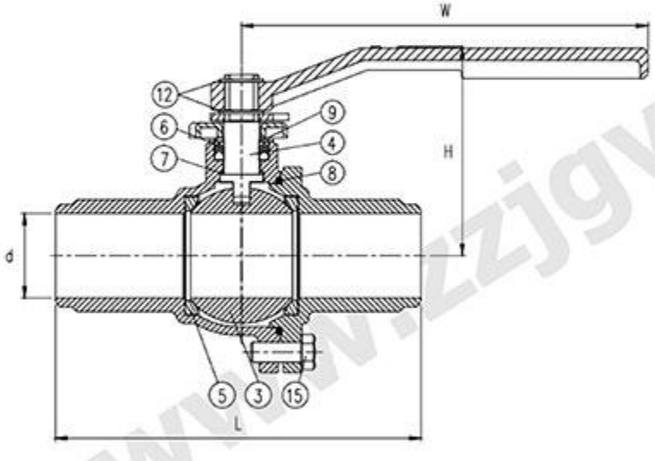

NO.	Parts Name
1	BODY
2	CAP
3	BALL
4	STEM
5	SEAT
6	GLAND PACKING
7	BACK PACKING
8	GASKET
9	GLAND BUSH
10	GLAND
11	STOPPER
12	SNAP RING
13	HANDLE
14	HEX SOCKET BOLT
15	HEX BOLT

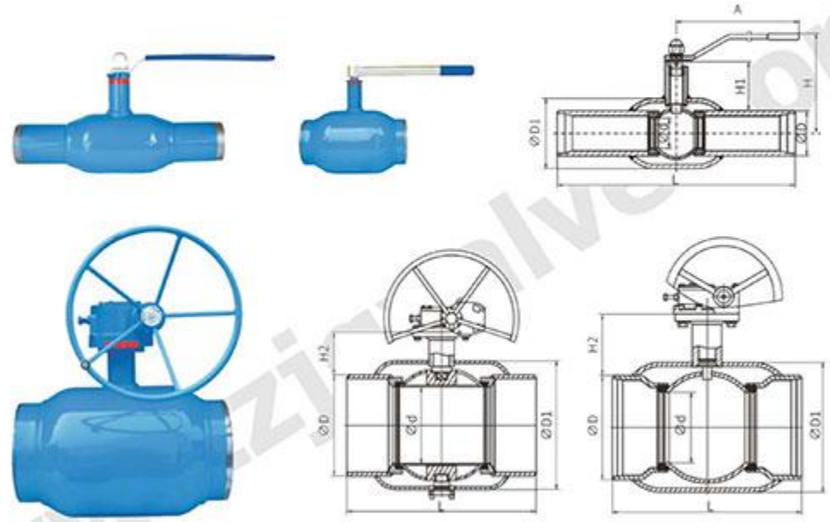

Full Welded Ball Valve Q61F-25/Q361F-25/Q367F-25 (mm)										
DN(mm)	PN	L	A	H	H1	H2	d	D(GB)	D(DIN)	D1
15	25	230	120	93	41	-	10	22	21.3	42.4
20	25	230	120	97	43	-	15	25	26.9	42.4
25	25	230	150	103	42	-	20	32	33.7	48.3
32	25	260	150	109	44	-	25	38	42.4	60.3
40	25	260	190	119	60	-	32	45	48.3	76.1
50	25	300	190	125	61	-	40	57	60.3	88.9
65	25	300	275	183	74	73	50	73	76.1	114.3
80	25	300	275	196	80	79	65	89	88.9	139.7
100	25	325	275	219	100	90	80	108	114.3	168.3
125	25	325	415	242	91	910	100	133	139.7	177.8
150	25	350	540	248	100	112	125	159	168.3	219.1
200	25	400	745	275	105	95	150	219	219.1	273
250	25	-	530	-	-	126	200	273	273	355.6
300	25	-	550	-	-	149	250	325	323.9	426
350	25	-	686	-	-	167	290	377	355.6	508
400	25	-	762	-	-	184	350	426	406.4	558.8
450	25	-	840	-	-	189	350	480	478	630
500	25	-	991	-	-	221	400	529	508	680
600	25	-	1065	-	-	252	500	630	609.6	830
700	25	-	1346	-	-	298	600	720	711.2	994
800	25	-	1524	-	-	354	700	820	812.8	1148
900	25	-	1727	-	-	400	781	920	914.4	1252
1000	25	-	1900	-	-	452	874	1020	1016	1406
1200	25	-	2100	-	-	497	1020	1220	1219.2	1714
1400	25	-	2430	-	-	582	1166	1420	1422	1870
1600	25	-	2680	-	-	695	1458	1620	1626	250

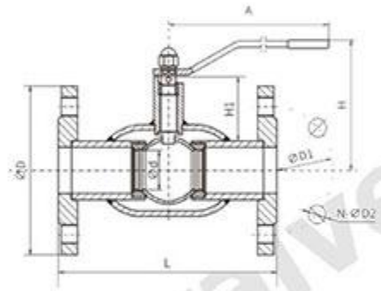

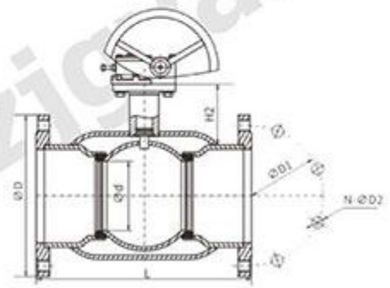

Flanged Welded Ball Valve Q41F-16C/Q341F-16C/Q347F-16C (mm)											
DN(mm)	PN	PN(Flange)	L	A	H	H1	H2	d	D	D1	N-ΦD2
15	25	16	130	120	93	41	-	10	95	65	4-Φ14
20	25	16	150	120	97	43	-	15	105	75	4-Φ14
25	25	16	160	150	103	42	-	20	115	85	4-Φ14
32	25	16	180	150	109	44	-	25	140	100	4-Φ18
40	25	16	200	190	119	60	-	32	150	110	4-Φ18
50	25	16	230	190	125	61	-	40	165	125	4-Φ18
65	25	16	270	275	183	74	73	50	185	145	4-Φ18
80	25	16	280	275	196	80	79	65	200	160	8-Φ18
100	25	16	300	275	219	100	90	80	220	180	8-Φ18
125	25	16	325	415	242	91	91	100	250	210	8-Φ18
150	25	16	350	540	248	100	112	125	285	240	8-Φ22
200	25	16	410	745	275	105	95	150	340	295	12-Φ22
250	25	16	500	-	-	-	126	200	405	355	12-Φ26
300	25	16	590	-	-	-	149	250	460	410	12-Φ26
350	25	16	690	-	-	-	167	290	520	470	16-Φ26
400	25	16	750	-	-	-	184	350	580	525	16-Φ30

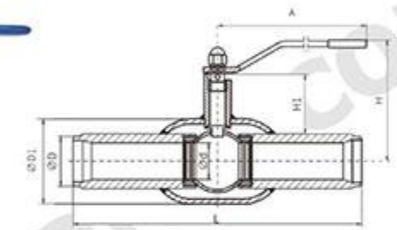

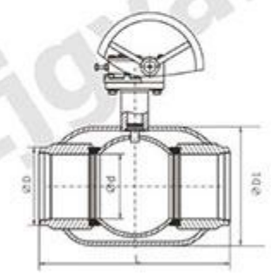

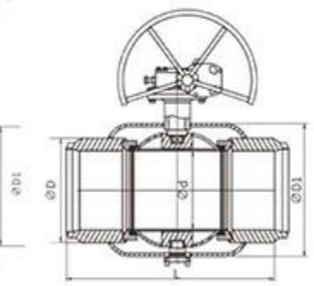

Full Welded Ball Valve (full bore) Q16F-25F/Q316F-25F/Q317F-25F									
DN(mm)	PN	L	A	H	H1	d	D(GB)	D(DIN)	D1
15	25	230	120	97	45	15	22	21.3	42.4
20	25	230	150	103	46	20	25	26.9	48.3
25	25	260	150	109	48	25	32	33.7	60.3
32	25	260	190	119	63	32	38	42.4	76.1
40	25	300	190	125	67	40	45	48.3	88.9
50	25	300	275	183	82	50	57	60.3	114.3
65	25	300	275	196	87	65	73	76.1	139.7
80	25	325	275	219	104	80	89	88.9	168.3
100	25	325	415	242	104	100	108	114.3	177.8
125	25	350	540	248	118	125	133	139.7	219.1
150	25	400	745	275	130	150	159	168.3	273
200	25	530	-	-	-	200	219	219.1	335.6
250	25	550	-	-	-	250	273	273	426
300	25	686	-	-	-	290	325	323.9	508
350	25	762	-	-	-	350	377	355.6	558.8
400	25	991	-	-	-	400	426	406.4	680
500	25	1065	-	-	-	500	529	508	830
600	25	1346	-	-	-	600	630	509.6	994
700	25	1524	-	-	-	700	720	711.2	1148
800	25	1727	-	-	-	781	820	812.8	1252
900	25	1900	-	-	-	874	920	914.4	1406
1100	25	2100	-	-	-	1020	1020	1016	1714
1200	25	2430	-	-	-	1166	1220	1219.2	1870

Flanged Eccentric Half Ball Valve

Overview

The eccentric half ball valve is a relatively new type of ball valve. It has some unique advantages due to its own structure, such as no friction in the switch, the seal is not easy to wear, and the opening and closing torque is small. It can realize the adjustment and strict isolation of the medium. It is widely used in petroleum, chemical industry, urban water supply and drainage and other working conditions that require strict cutting.

Design principles

The valve adopts a double eccentric structure and uses the deformation wedge action principle of the eccentric wheel to tighten and separate the valve seal pair. Thus achieving reliable sealing and rapid opening and closing of the valve.

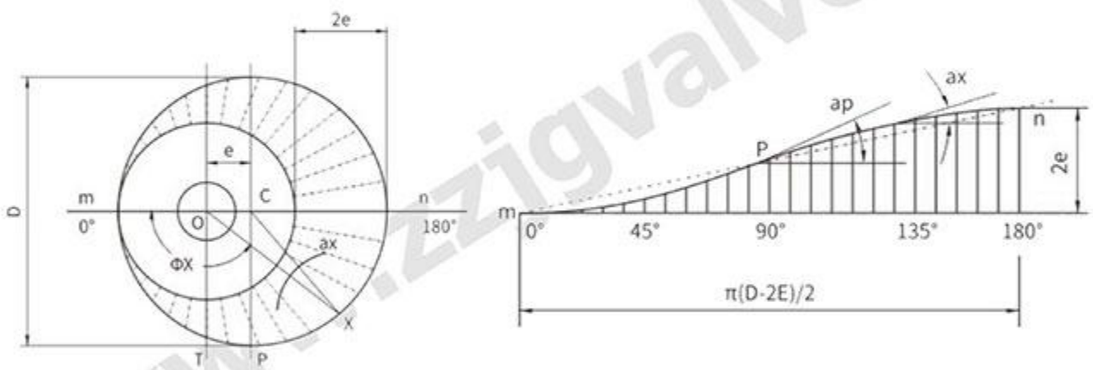

Features

Since the rotation radii of all points on the valve disc sealing spherical surface are different, the eccentric spherical surface curve is an isotropic curve. When closing, the sealing spherical surface enters the valve seat and closes tighter and tighter, forming a sufficient sealing specific pressure, and the two-way sealing performance is stable and reliable.

The valve disc is a fully circular straight channel, therefore it has small flow resistance and good flow performance. The sealing pair has the characteristics of wear resistance, corrosion resistance and long service life. During the switching process, the dirt on the sealing surface can be removed by itself without affecting the seal.

When the sealing position changes during long-term use, the sealing spherical surface moves forward by an equal amount and remains pressed against the fixed sealing seat, allowing a new seal to be achieved.

Main Technical Parameters					
Nominal pressure (MPa)	0.6	1.0	1.6	2.5	4.0
Nominal diameter (mm)	40~2600	40~2600	40~1000	40~1000	40~600
Sealing test (MPa)	0.66	1.1	1.76	2.75	4.4
Shell test (MPa)	0.9	1.5	2.4	3.75	6.0
Applicable media	Clean water, sea water, sewage, acid and alkali and other liquids, slurry, steam, gas oil, media containing particles				
Applicable temperature	0℃~540℃				
Operation	manual, worm gear, pneumatic, electric				
Connecting type	Flange BW				

Flanged Eccentric Half Ball Valve

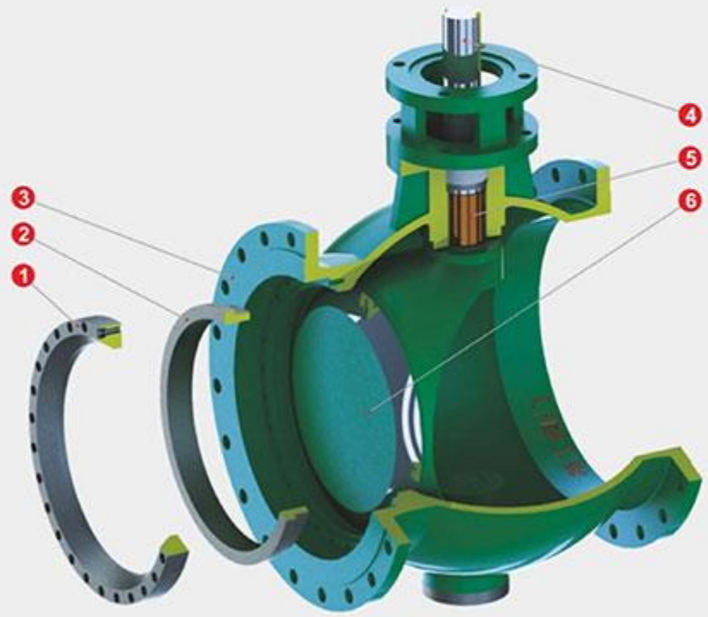

Main Parts

1	platen
2	metal seal seat
3	body
4	valve shaft
5	self-lubricating sleeve
6	ball

Main Parts Materials	
Part	Material
body, bonnet	QT450-10, WCB, stainless steel, alloy steel
valve shaft	40Cr, stainless steel
plate, seat	Alloy nitrided steel, Nitrided stainless steel, Wear-resistant carbide
body, seat	Alloy nitrided steel, Nitrided stainless steel, Wear-resistant carbide
bearing	aluminium bronze, FZ-1 composite material, stainless steel
packings	PTFE, expanded graphite

Main Design & Manufacturing Standards		
Design standard	GB/T 26146-2010	Eccentric stmi-ball valve
Flange standard	GB/T 9115	Steel pipe welding neck flanges
Structure length standard	GB/T 12221-2005	Metal valves - Face to face, end to end, center to face and center to end dimensions
	ISO 5752:1982	Metal valves for use in flanged pipe systems Face-to-face and center-to-face dimensions, MOD
Pressure testing standard	GB/T 13927-2008	Industrial valves - Pressure testing

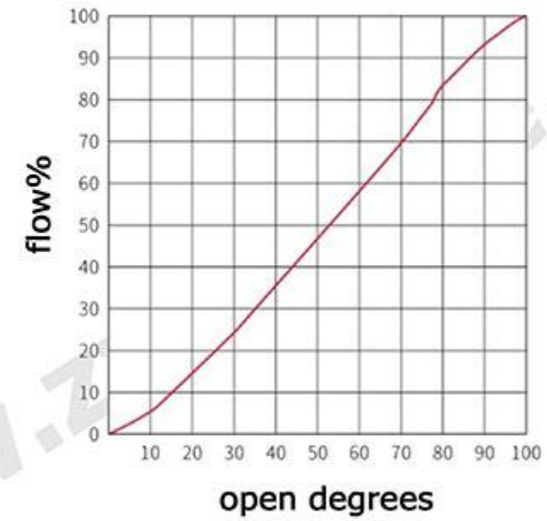

Flow Coefficient (CV) of the Diameter of the Eccentric Half Ball Valve											
Valve diameter		Standard channel valve, ball opening (%)									
in	mm	10	20	30	40	50	60	70	80	90	100
3	80	8.40	18.90	33.60	46.20	63.00	92.40	147.00	210.00	309.20	420.00
4	100	15.40	34.70	61.60	84.70	115.50	169.40	269.50	385.00	585.00	770.00
6	150	36.00	81.00	144.00	198.00	270.00	369.00	630.00	900.00	1368.00	1800.00
8	200	68.00	153.00	272.00	374.00	510.00	748.00	1190.00	1700.00	2584.00	3400.00
10	250	118.00	265.00	472.00	649.00	885.00	1298.00	2065.00	2950.00	4484.00	5900.00
12	300	160.00	360.00	640.00	880.00	1200.00	1760.00	2800.00	4000.00	6080.00	8000.00
14	350	240.00	540.00	960.00	1320.00	1800.00	2640.00	4200.00	6000.00	9120.00	12000.00
16	400	280.00	630.00	1120.00	1540.00	2100.00	3080.00	4900.00	7000.00	10640.00	14000.00
18	450	360.00	310.00	1440.00	1980.00	2700.00	3960.00	6300.00	90000.00	13680.00	13000.00
20	500	440.00	990.00	1760.00	2420.00	3300.00	4840.00	7700.00	11000.00	16720.00	22000.00

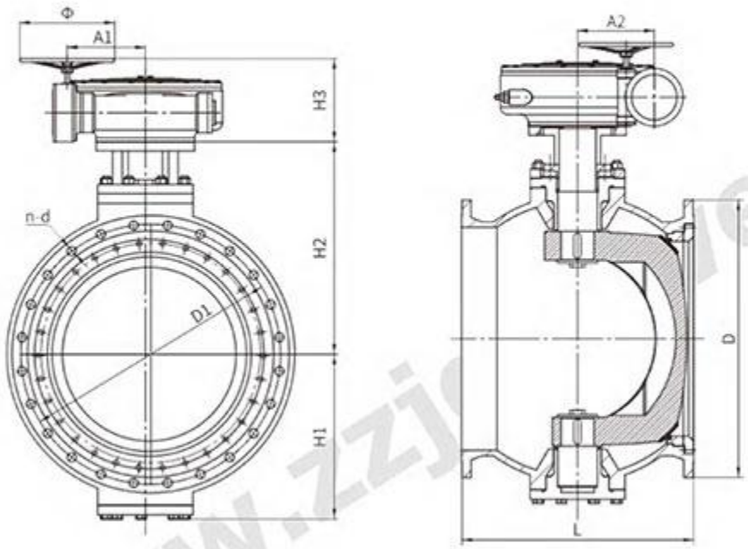

PBQ347H-6/10 Worm Gear Operated Eccentric Half Ball Valve Connection Dimensions													
DN	L	H1	H2	H3	A1	A2	Φ	0.6MPa			1.0MPa		
								D	D1	n-d	D	D1	n-d
40	165	75	135	62	105	32	150	130	100	4-Φ14	150	110	4-Φ18
50	178	83	155	81	135	43	180	140	110	4-Φ14	165	125	4-Φ18
65	190	95	172	81	135	42	180	160	130	4-Φ14	185	145	4-Φ18
80	203	110	175	81	135	42	180	190	150	4-Φ18	200	160	8-Φ18
100	229	135	215	112	202	60	320	210	170	4-Φ18	220	180	8-Φ18
125	254	150	235	112	202	60	320	240	200	8-Φ18	250	210	8-Φ18
150	267	170	255	112	202	60	320	265	225	8-Φ18	285	240	8-Φ22
200	292	190	305	127	220	93	320	320	280	8-Φ18	340	295	8-Φ22
250	330	230	365	157	287	123	400	375	335	12-Φ18	395	350	12-Φ22
300	356	255	385	157	287	123	400	440	395	12-Φ22	445	400	12-Φ22
350	450	310	430	178	347	180	390	490	445	12-Φ22	505	460	16-Φ22
400	530	335	465	178	347	180	390	540	495	16-Φ22	565	515	16-Φ26
450	580	375	550	216	410	217	390	595	550	16-Φ22	615	565	20-Φ26
500	660	405	580	216	410	217	390	645	600	20-Φ22	670	620	20-Φ26
600	680	470	670	235	521	281	500	755	705	20-Φ26	780	725	20-Φ30
700	900	510	720	235	521	281	500	860	810	24-Φ26	895	840	24-Φ30
800	1000	585	845	243	560	258	630	975	920	24-Φ30	1015	950	24-Φ33
900	1100	680	925	243	560	258	630	1075	1020	24-Φ30	1115	1050	28-Φ33
1000	1200	705	955	310	658	290	800	1175	1120	28-Φ30	1230	1160	28-Φ36
1200	1300	900	1050	310	658	290	800	1405	1340	32-Φ33	1455	1380	32-Φ39
1400	1500	995	1100	355	750	348	900	1630	1560	36-Φ36	1675	1590	36-Φ42
1600	1800	1135	1200	480	990	595	1000	1830	1760	40-Φ36	1915	1820	40-Φ48
1800	2100	1400	1320	480	990	595	1000	2045	1970	44-Φ39	2115	2020	44-Φ48
2000	2300	1550	1500	480	990	595	1000	2265	2180	48-Φ42	2325	2230	48-Φ48
2200	2400	1830	1680	490	1045	639	1300	2475	2390	52-Φ42	2550	2440	52-Φ56
2400	2600	2030	1850	490	1045	639	1300	2685	2600	56-Φ42	2760	2650	56-Φ56
2600	2800	2230	2000	490	1045	639	1300	2905	2810	60-Φ48	2960	2850	60-Φ56

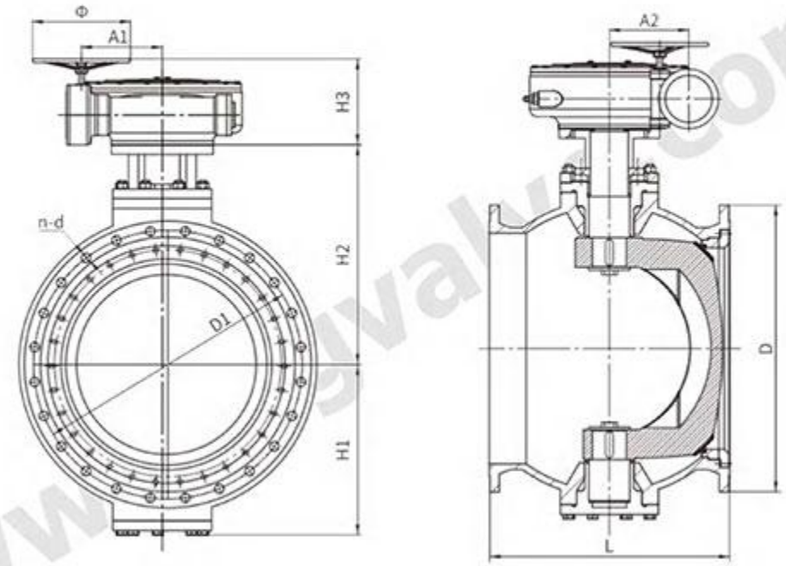

PBQ347H-16/25 Worm Gear Operated Eccentric Half Ball Valve Connection Dimensions													
DN	L	H1	H2	H3	A1	A2	Φ	1.6MPa			2.5MPa		
								D	D1	n-d	D	D1	n-d
40	165	75	135	62	105	32	150	150	110	4-Φ18	150	110	4-Φ18
50	178	83	155	81	135	42	180	165	125	4-Φ18	165	125	4-Φ18
65	190	95	172	81	135	42	180	185	145	4-Φ18	185	145	8-Φ18
80	203	110	175	81	135	42	180	200	160	8-Φ18	200	160	8-Φ18
100	229	135	215	98	202	60	320	220	180	8-Φ18	235	190	8-Φ22
125	254	150	235	98	202	60	320	250	210	8-Φ18	270	220	8-Φ26
150	267	170	255	127	220	93	320	285	240	8-Φ22	300	250	8-Φ26
200	292	190	305	157	287	123	400	340	295	12-Φ22	360	310	12-Φ26
250	330	230	365	157	287	123	400	405	355	12-Φ26	425	370	12-Φ30
300	356	255	385	157	347	120	390	460	410	12-Φ26	485	430	16-Φ30
350	450	310	430	196	441	144	500	520	470	12-Φ26	555	490	16-Φ33
400	530	335	465	196	441	144	500	580	525	16-Φ30	620	550	16-Φ36
450	580	375	550	238	521	210	500	640	585	20-Φ30	670	600	20-Φ36
500	660	405	580	238	521	210	500	715	650	20-Φ33	730	660	20-Φ36
600	680	470	670	243	560	258	630	840	770	20-Φ33	845	770	20-Φ39
700	900	510	720	243	560	258	630	910	840	20-Φ36	960	875	24-Φ42
800	1000	585	845	243	560	258	630	1025	950	24-Φ39	1085	990	24-Φ48
900	1100	680	925	310	658	290	800	1125	1050	28-Φ39	1185	1090	28-Φ48
1000	1200	705	955	310	658	290	800	1255	1170	28-Φ42	1320	1210	28-Φ56

Welded Eccentric Half Ball Valve

Features

Eccentric spherical curve design: when valve is closed, forming high sealing pressure, makes the bidirectional sealing performance stable and reliable.

Valve disc is a fully circular straight channel, small flow resistance. Sealing pair resistant to abrasiveness, corrosion and has long service life.

During valve opening/closing, the sealing surface can be cleaned. Applicable Medium: acid and alkali liquids, slurry, steam, oil, containing granular medium.

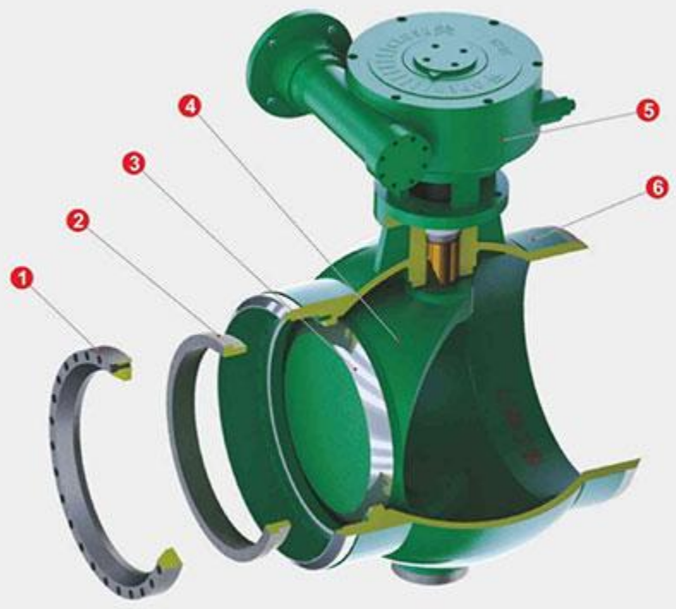

1	platen
2	metal seal seat
3	alloy sealing
4	ball
5	actuator
6	all-welded body

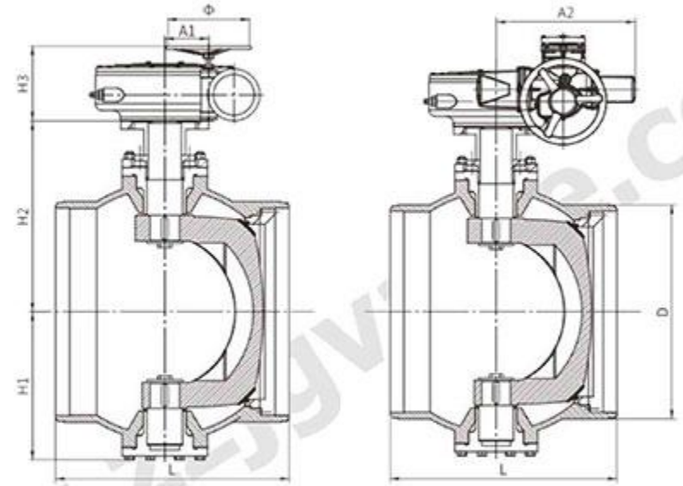

PBQ367H-2.5/6/10/16 Worm Gear Operated Welded Eccentric Half Ball Valve Dimensions (mm)								
DN	L	H1	H2	H3	A1	A2	Φ	D
200	430	190	305	127	220	93	320	219
250	470	230	365	157	287	123	400	273
300	500	255	385	157	287	123	400	325
350	570	310	430	178	347	180	390	377
400	600	335	465	178	347	180	390	426
450	710	375	550	216	410	217	390	480
500	760	405	580	216	410	217	390	530
600	880	470	670	235	521	281	500	630
700	950	510	720	235	521	281	500	720
800	980	585	845	243	560	258	630	820
900	1060	680	925	243	560	258	630	920
1000	1140	705	955	310	658	290	800	1020
1200	1350	900	1050	310	658	290	800	1220
1400	1580	995	1100	355	750	348	900	1420
1600	1780	1135	1200	480	990	595	1000	1620

PBQ967H-2.5/6/10/16 Electric Operated Welded Eccentric Half Ball Valve Dimensions (mm)								
DN	L	H1	H2	H3	A1	A2	Φ	D
200	430	190	305	302	240	175	300	219
250	470	230	365	410	552	101	360	273
300	500	255	385	410	552	101	360	325
350	570	310	430	473	625	152	500	377
400	600	335	465	473	625	152	500	426
450	710	375	550	473	625	152	500	480
500	760	405	580	488	680	375	500	530
600	880	470	670	488	680	375	500	630
700	950	510	720	488	680	375	500	720
800	980	585	845	550	412	757	300	820
900	1060	680	925	550	412	757	300	920
1000	1140	705	955	600	452	830	400	1020
1200	1350	900	1050	670	452	830	400	1220
1400	1580	995	1100	680	475	943	305	1420
1600	1780	1135	1200	885	475	943	305	1620

Top Entry Eccentric Half Ball Valve

Overview

Top entry eccentric half ball valve internal parts from the valve upper installation and disassembly of the ball valve, the advantage is that during maintenance, no need to remove from the pipeline, Top entry eccentric half ball valve can be replaced and repaired easily.

It adopts an eccentric body, eccentric ball, and seat, the stem rotates in the common trajectory automatic centering, the closing process more and more tight, completely achieving a good sealing purpose. Top entry eccentric half ball valve ball and seat are completely separated, eliminating the wear of the sealing ring and overcoming the problem of the traditional ball seat and ball sealing surface wear all the time.

Features

Small pressure loss

Water loss is zero when fully open, the flow channel is completely unobstructed, and the medium will not be deposited in the middle cavity of the valve body.

Suitable for high flow rate media

Straight flow channel and strong eccentric crankshaft make it suitable for high flow rate and vibration-free.

Long service life

There are no wearing parts. Due to the eccentric effect, there is no friction between the sealing surfaces when the valve is opened and closed, and the service life is long.

Convenient maintenance

The valve does not need to be removed from the pipeline for maintenance, as long as the valve cover is opened for maintenance.

Resistant to particle wear

There is a shearing effect between the V-shaped opening spherical crown and the metal valve seat. During the closing process, the spherical crown only leans toward the valve seat at the last moment, without causing friction, and the valve seat is made of wear-resistant material. Made of nickel alloy, it is not easily washed away and worn, so it is suitable for applications containing fibers, tiny solid particles, slurries, etc.

Applications

Top Entry Eccentric Half Ball Valve is widely used in water, sewage, containing micro-solid particles, steam, gas, natural gas, oil, etc.

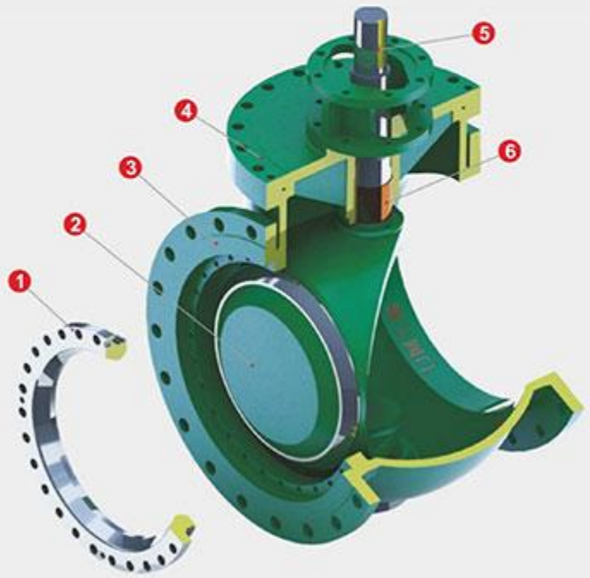

Main Parts

1	platen
2	ball
3	body
4	bonnet
5	stem
6	Self-lubricating sleeve

Main Parts Materials			
body	gray cast iron	ductile cast iron	cast steel
bonnet	gray cast iron	ductile cast iron	cast steel
stem	2Cr13	2Crl3	2Crl3
seat	stainless steel	stainless steel	stainless steel
ball crown	Ductile iron covered with rubber, stainless steel	stainless steel	Cast steel covered rubber PF stainless steel
half ball	gray cast iron	ductile cast iron	cast steel

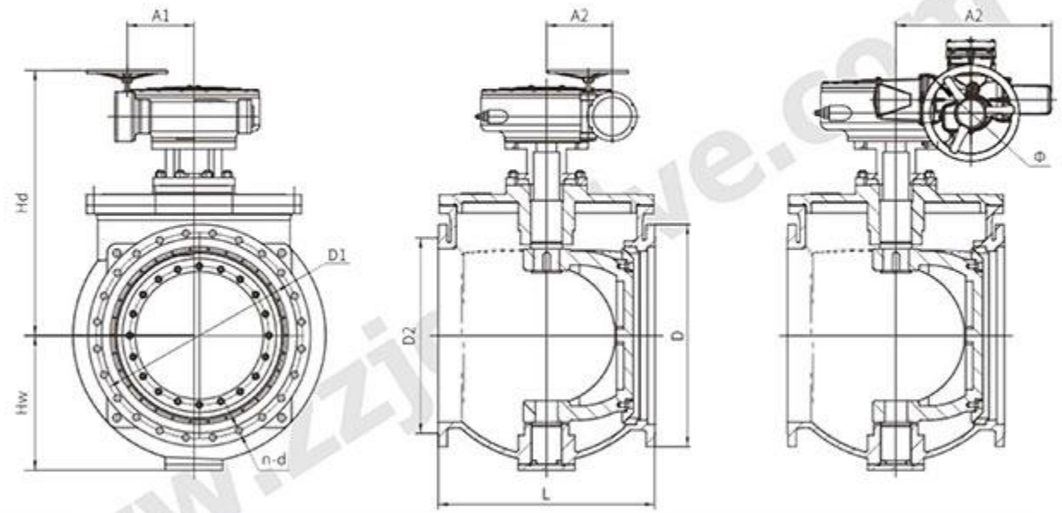

Main Dimensions (mm)								
DN	L	D	D1	D2	b	n-d	Hw	Hd
PN10								
100	229	215	180	155	22	8-Φ18	330	380
125	254	245	210	185	24	8-Φ18	345	405
150	267	280	240	210	24	8-Φ23	370	440
200	292	335	295	265	24	8-Φ23	405	470
250	330	390	350	320	26	12-Φ23	480	540
300	356	440	400	368	28	12-Φ23	520	580
350	450	500	460	428	28	16-Φ23	570	630
400	530	565	515	482	30	16-Φ25	630	710
450	580	615	565	532	30	20-Φ25	690	770
500	660	670	620	585	32	20-Φ25	740	820
600	680	780	725	685	36	20-Φ30	840	940
700	900	895	840	794	34	24-Φ30	960	1040
800	1000	1015	950	901	36	24-Φ33	1080	1180
900	1100	1115	1050	1001	38	28-Φ33	1190	1280
1000	1200	1230	1160	1112	38	28-Φ36	1310	1420
1200	1300	1455	1380	1328	44	32-Φ39	1420	1530
1400	1500	1675	1590	1530	48	36-Φ42	1540	1650
PN16								
100	229	215	180	155	20	8-Φ18	330	380
125	254	245	210	185	22	8-Φ18	345	405
150	267	280	240	210	24	8-Φ23	370	440
200	292	335	295	265	26	12-Φ23	405	470
250	330	405	355	320	30	12-Φ25	480	540
300	356	460	410	375	30	12-Φ25	520	580
350	450	520	470	435	34	16-Φ25	570	630
400	530	580	525	485	36	16-Φ30	630	710
450	580	640	585	545	40	20-Φ30	690	770
500	660	705	650	608	44	20-Φ34	740	820
600	680	840	770	718	48	20-Φ41	840	940
700	900	910	840	788	50	24-Φ41	960	1040
800	1000	1020	950	898	52	24-Φ41	1080	1180
900	1100	1120	1050	998	54	28-Φ41	1190	1280
1000	1200	1255	1170	1110	56	28-Φ48	1310	1420
1200	1300	1485	1390	1325	58	32-Φ54	1420	1530
1400	1500	1685	1590	1525	60	36-Φ54	1540	1650

Double Eccentric V-type Ball Valve

Overview

Double Eccentric V-type Ball Valve, also known as cam flex valve, is a new generation of products developed by our company by integrating similar pioneer product technology at home and abroad, and its structure has the advantages of small size, full diameter, large flow house coefficient, light opening and closing, and self-cleaning.

The material and its process have unique advantages such as wear resistance and erosion resistance, which can effectively improve the reliability and operation cycle of the valve, effectively reduce the operation and maintenance costs, and save energy and reduce consumption.

Applications

This valve can be used in metallurgy, mining, chemical industry, petrochemical, electric power, environmental protection, municipal administration and other industries.

Working Principle

The upper shaft of the double eccentric v-type ball valve drives the spool (an eccentric fan-shaped hemisphere arranged in the valve cavity) to rotate 90° around the upper and lower valve shafts. When rotating clockwise, the valve is closed, the valve core enters the valve seat, under the action of eccentricity, the valve core pressurizes the valve seat, the tighter the fun, after the sealing surface wears, the valve seat can compensate for the wear under the promotion of the spring; when the counterclockwise rotation, the valve opens, under the action of eccentricity, the valve core can be quickly separated from the valve seat, and the rest of the stroke has no contact, no wear, and the opening and closing is light .

Technical Parameters	
Size range	DN25~900mm NPS1"~36"
Pressure	PN1.0~25MPa Class150~1500
Body material	CF8, CF8M, CF3, CF3M, A890 4A, alloy steel
Operation	manual, worm gear, hydraulic, electric, pneumatic, electric-hydraulic, etc.
Applicable temperature	0~425°C
Applicable medium	Grey water, slag water, slurry, ash powder, weakly corrosive medium, etc.

Double Eccentric V-type Ball Valve Flow Characteristic Curve

Valve diameter		Standard channel valve, ball opening (%)									
in	mm	10	20	30	40	50	60	70	80	90	100
3	80	8.40	18.90	33.60	46.20	63.00	92.40	147.00	210.00	309.20	420.00
4	100	15.40	34.70	61.60	84.70	115.50	169.40	269.50	385.00	585.00	770.00
6	150	36.00	81.00	144.00	198.00	270.00	369.00	630.00	900.00	1368.00	1800.00
8	200	68.00	153.00	272.00	374.00	510.00	748.00	1190.00	1700.00	2584.00	3400.00
10	250	118.00	265.00	472.00	649.00	885.00	1298.00	2065.00	2950.00	4484.00	5900.00
12	300	160.00	360.00	640.00	880.00	1200.00	1760.00	2800.00	4000.00	6080.00	8000.00
14	350	240.00	540.00	960.00	1320.00	1800.00	2640.00	4200.00	6000.00	9120.00	12000.00
16	400	280.00	630.00	1120.00	1540.00	2100.00	3080.00	4900.00	7000.00	10640.00	14000.00
18	450	360.00	310.00	1440.00	1980.00	2700.00	3960.00	6300.00	90000.00	13680.00	13000.00
20	500	440.00	990.00	1760.00	2420.00	3300.00	4840.00	7700.00	11000.00	16720.00	22000.00

Structure

Technical features

1) Double eccentric design, forced sealing

Double eccentric design, the spool does cam movement more and more tight, to achieve forced sealing. When rotated clockwise, the valve closes and the spool enters the seat. Under the action of eccentricity, the spool pressurizes the seat and closes tighter and tighter to achieve a reliable seal. The valve core only contacts the valve seat instantaneously at the moment of opening and closing, and the rest of the stroke has no contact and no wear, and the opening and closing is light, which can effectively reduce the wear of the sealing pair to extend valve life.

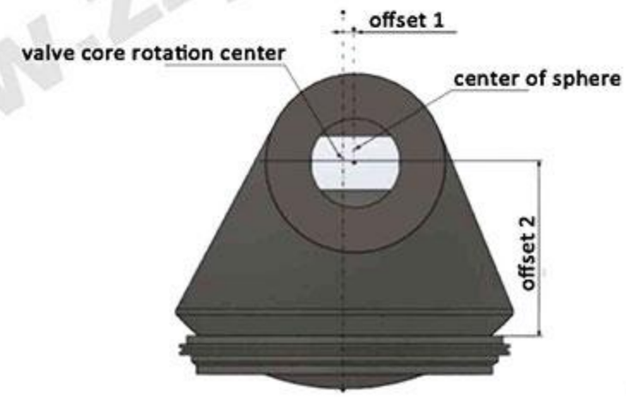

2) Single-seat, full-bore design

After the valve is opened, there is no flow blocking element in the valve cavity, which can avoid the generation of eddy current; after closing, there is no material retention in the valve cavity, which reduces the wear of the material to the valve cavity, and the cemented carbide spray welding of the sealing pair has high hardness and high wear resistance, and the adhesive materials and sundries of the sealing pair can be sheared when closed, forming a self-cleaning function.

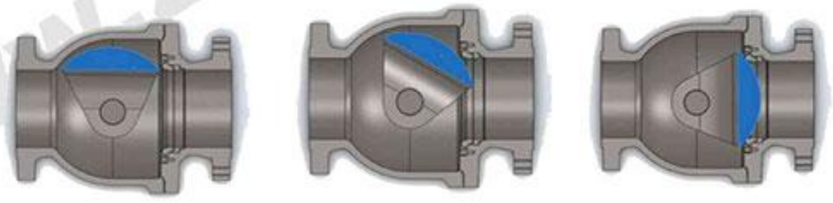

3) Floating seat design

The floating valve seat can absorb the influence of thermal expansion and contraction caused by temperature changes on parts under high temperature or large temperature difference working conditions, ensuring the reliability of valve sealing performance.

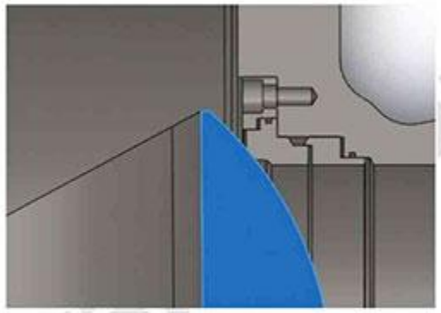

4) Wear-resistant design of upper and lower support shafts

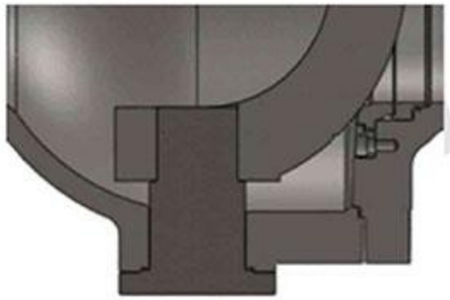

The contact parts between the upper and lower support shafts and the valve core are sprayed with cemented carbide wear-resistant treatment to improve the strength, ensure the wear resistance of long-term use, and meet the requirements of frequent opening and closing of the process.

5) Fixed ball design

The valve core is fixed by the upper and lower support shafts, which solves the influence of the medium force on the seal, and the valve stem only bears the opening and closing torque to ensure that the valve stem will not be stuck in extreme cases.

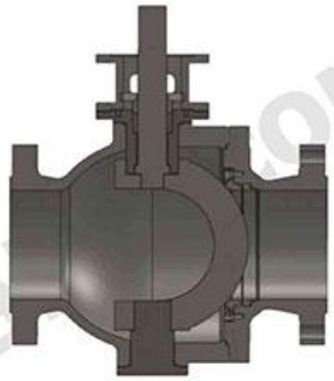

6) Stem blow-out resistant design

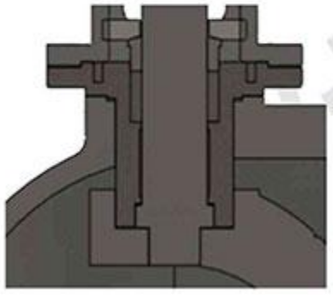

The valve core is fixed by the upper and lower support shafts, which solves the influence of the medium force on the seal, and the valve stem only bears the opening and closing torque to ensure that the valve stem will not be stuck in extreme cases.

Main Design & Manufacturing Standards

Standard content	Standard	Standard name
Design and manufacturing	BS 5351	Steel Ball Valves for the Petroleum, Petrochemical and Allied Industries
	API 6D	Specification for Pipeline and Pipeline Valves
	GB/T 12237	General purpose industrial valves-Flanged and butt-weld end steel ball valves
	ISO 521	Machine chucking reamers with cylindrical shanks and Morse taper shanks
	ISO 17292	Metal ball valves for petroleum, petrochemical and allied industries
Structure length standard	ASME B16.10	Face-to-Face and End-to-End Dimensions of Valves
	ISO 5752	Metal valves for use in flanged pipe systems Face-to-face and centre-to-face dimensions
	GB/T 12221	Metal valves - Face to face, end to end, center to face and center to end dimensions
Flange standard	ASME B16.5	Pipe Flanges and Flanged Fittings: NPS 1/2 through NPS 24, Metric/Inch Standard
	ASME B16.7	Forged Slip On Flanges
	HG/T 20592	Steel pipe flanges (PN designated)
	SH/T 3406	Specification for steel pipe flanges in petrochemical engineering
Pressure test standard	API 598	Valve Inspection and Testing
	GB/T 13927	Industrial valves - Pressure testing
	ISO 5208:2015	Industrial valves - Pressure testing of metallic valves, MOD
	MSS SP-61	Pressure Testing of Valves

Parts	Material
Body	WCB, CF8, CF3, CF8M,CF3M
Core	WCB, CF8, CF3, CF8M,CF3M+nickel-based alloy
Shaft	20Cr13, 304, 316, 17-4PH
Seat	A105, 304, 316+nickel-based alloy

Double Eccentric V-type Ball Valve

Pressure CL	Diameter		Dimensions (mm)							
	DN	NPS	L		D	D1	D2	n-d	b	f
			Flange	BW						
Class150 PN20	100	4	229	305	229	190.5	157	8-Φ19	24	2
	125	5	356	381	254	216	186	8-Φ22	24	2
	150	6	394	457	279	241.5	216	8-Φ22	25.5	2
	200	8	457	521	343	298.5	270	8-Φ22	29	2
	250	10	533	559	406	362	324	12-Φ25	31	2
	300	12	610	635	483	432	381	12-Φ25	32	2
	350	14	686	762	533	476	413	12-Φ29	35	2
	400	16	762	838	597	540	470	12-Φ29	37	2
	450	18	864	914	635	578	533	16-Φ32	40	2
	500	20	914	991	699	635	584	20-Φ32	43	2
	600	24	1067	1143	813	749.5	692	20-Φ35	48	2
	650	26	1143	1245	786	744.5	711	36-Φ22	40	2
	700	28	1245	1346	837	795.5	762	40-Φ22	43	2
	750	30	1295	1397	887	846	813	44-Φ22	43	2
	800	32	1372	1524	941	900	864	48-Φ22	44	2
	900	36	1524	1727	1057	1009.5	972	44-Φ26	51	2
Class300 PN50	100	4	305	305	254	200	157	8-Φ22	32	2
	125	5	381	381	279	235	186	8-Φ22	35	2
	150	6	457	457	318	270	216	12-Φ22	37	2
	200	8	521	521	381	330	270	12-Φ25	41.5	2
	250	10	559	559	445	387.5	324	16-Φ29	48	2
	300	12	635	635	521	451	381	16-Φ32	51	2
	350	14	762	762	584	514.5	413	20-Φ32	54	2
	400	16	838	838	648	571.5	470	20-Φ35	58	2
	450	18	914	914	711	628.5	533	24-Φ35	61	2
	500	20	991	991	775	686	584	24-Φ35	64	2
	600	24	1143	1143	914	813	692	24-Φ41	70	2
	650	26	1245	1245	867	803.5	737	32-Φ36	87	2
	700	28	1346	1346	921	857	787	36-Φ36	87	2
	750	30	1397	1397	991	921	845	36-Φ39	92	2
	800	32	1524	1524	1054	978	902	32-Φ42	102	2
	900	36	1727	1727	1172	1089	1010	32-Φ45	102	2

Pressure CL	Diameter		Dimensions (mm)							
	DN	NPS	L		D	D1	D2	n-d	b	f
			Flange	BW						
Class900 PN150	50	2	368	368	216	165.1	92	8-Φ26	38.5	7
	65	2.5	419	419	244	190.5	105	8-Φ29	41.5	7
	80	3	381	381	241	190.5	127	8-Φ26	38.5	7
	100	4	457	457	292	234.9	157	8-Φ32	44.5	7
	125	5	559	559	349	279.4	186	8-Φ35	51	7
	150	6	610	610	381	317.5	216	12-Φ32	56	7
	200	8	737	737	470	393.7	270	12-Φ39	63.5	7
	250	10	838	838	545	469.9	324	16-Φ39	70	7
	300	12	965	965	610	533.4	381	20-Φ39	79.5	7
	350	14	1029	1029	640	558.8	413	20-Φ42	86	7
	400	16	1130	1130	705	615.9	470	20-Φ45	89	7
	450	18	1219	1219	785	686	533	20-Φ51	102	7
	500	20	1321	1321	855	749.5	584	20-Φ55	108	7
	600	24	1549	1549	1040	901.5	692	20-Φ68	140	7
Class1500 PN260	25	1	254	254	150	101.6	51	4-Φ26	28.5	7
	40	1.5	305	305	180	123.6	73	4-Φ29	32	7
	50	2	368	368	215	165.1	92	8-Φ26	38.5	7
	65	2.5	419	419	245	190.5	105	8-Φ29	41.5	7
	80	3	470	470	265	203.2	127	8-Φ32	48	7
	100	4	546	546	310	241.3	157	8-Φ35	54	7
	125	5	673	673	375	292.1	186	8-Φ42	73.5	7
	150	6	705	705	394	317.5	216	12-Φ39	83	7
	200	8	832	832	483	393.7	270	12-Φ45	92	7
	250	10	991	991	585	482.6	324	12-Φ51	108	7
	300	12	1130	1130	675	571.5	381	16-Φ54	124	7
	350	14	1257	1257	750	635	413	16-Φ60	133.5	7
	400	16	1384	1384	825	705	470	16-Φ68	146.5	7
	450	18	1537	1537	915	774.5	533.5	16-Φ74	162	7
	500	20	1664	1664	985	832	584.5	16-Φ80	178	7

Gate Valve

Resilient Seated Gate Valve (Rising Stem)

Resilient Seated Gate Valve (Non-rising Stem)

Metal Seal Gate Valve

High Pressure Steam Gate Valve

API Wedge Gate Valve

Flat Gate Valve

Knife Gate Valve

Cam-Slide Line Blind Valve

Resilient Seated Gate Valve

Overview

A gate valve is designed with an actuator and a gate. The actuator can be a lever, a hand wheel, or an electric-powered motor. No matter what, it is expected to make the performance more convenient with the placed condition. The gate usually refers to a square or round piece of metallic, whose up and down determines the passing or no passing of the glide. Irrespective of the design and shape, the prime components of resilient seated gate valves include the gate, body, bonnet, stem, and valve seat.

For a long time, the general gate valves used in the market have generally suffered from water leakage or rust. Our company has introduced European high-tech rubber and valve manufacturing technology to produce resilient seated gate valves, which have overcome the poor sealing, elastic fatigue, rubber aging and rust of general gate valves and other defects.

The resilient seated gate valve uses the elastic valve plate to produce a small amount of elastic deformation to compensate for the slight elastic deformation to achieve a good sealing effect.

Rising Stem

Non-rising Stem

Features

1. Light weight: 20%-30% less than traditional gate valve, convenient for installation and maintenance.
2. Valve seat: Valve bottom designs makes no debris deposits.
3. Overall encapsulation: High-quality rubber for encapsulation. Accurate geometric dimension, strong adhesive force achieve high quality sealing.
4. Precision casting valve body: Precise geometric dimension ensures good sealing.
5. Anti-corrosion: Powder epoxy resin coating, prevent corrosion and rust of the valve body, be used for sewage system.
6. Three "O"-shaped seal rings: Reduced the frictional resistance during opening and closing. The seal ring can be replaced without water supply shutoff.
7. Range of Working temperature: 0℃~200℃.
8. Connecting type: Flange.
9. Embedded copper nut: The copper nut and soft sealing valve are of embedded connection, making them closely integrated without looseness or damage.
10. Rising stem valve requires a large installation space and its thread is easy to lubricate and is not corroded by fluid impact.

Main Parts

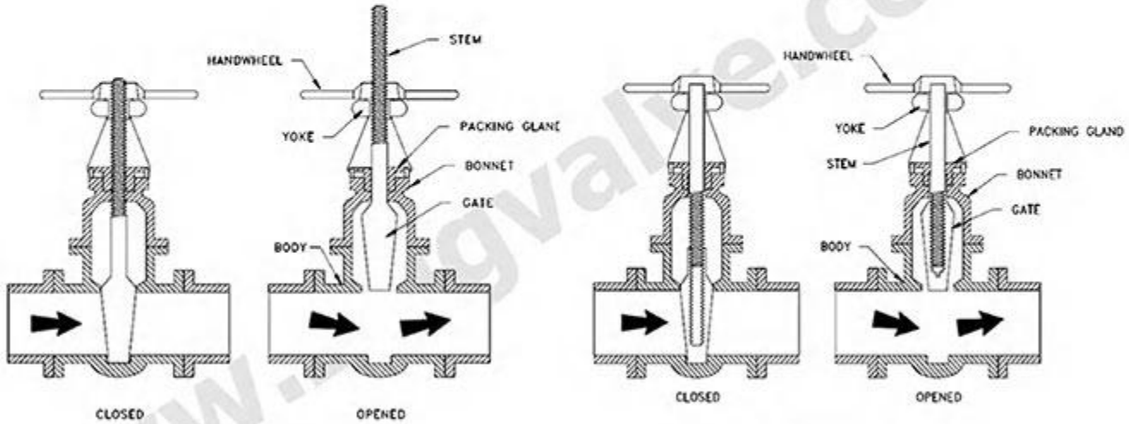

Rising Stem **Non-rising Stem**

Applications

Resilient Seated Gate Valve can be widely used as a regulating and intercepting device in fluid pipelines such as tap water, sewage construction, petroleum, chemical industry, food, medicine, textile, electric power, shipbuilding, metallurgy, energy systems, etc.

Resilient Seated Gate Valve (Rising Stem)

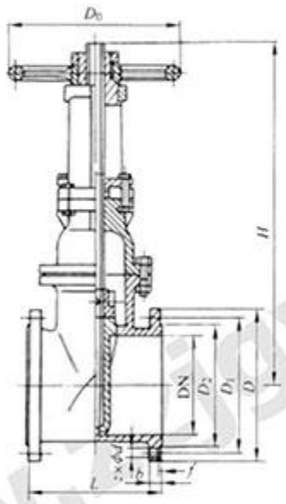

Type1- Z41X-10 DN50~DN600mm 2"~24" Class150 Rising Stem Resilient Seated Gate Valve							
DN(mm)	L	D	D_0	D_1	b	f	z×Φd
50	178	165	125	99	20	3	4×Φ19
65	190	185	145	118	20	3	4×Φ19
80	203	200	160	132	22	3	8×Φ19
100	229	220	160	132	22	3	8×Φ19
125	254	250	210	184	26	3	8×Φ19
150	267	285	240	211	26	3	8×Φ23
200	229	340	295	266	26	3	8×Φ23
250	330	395	350	319	28	4	12×Φ23
300	356	445	400	370	28	4	12×Φ23
350	381	505	460	429	30	4	16×Φ23
400	406	565	515	480	32	4	16×Φ28
450	432	615	565	530	32	4	20×Φ28
500	457	670	620	582	34	4	20×Φ28
600	508	780	725	682	36	5	20×Φ31

Type2- Z41X-16Q DN50~DN600 2"~24" Class150 Rising Stem Resilient Seated Gate Valve							
DN(mm)	L	D	D_0	D_1	b	f	z×Φd
50	178	165	125	99	20	3	4×Φ19
65	190	185	145	118	20	3	4×Φ19
80	203	200	160	132	22	3	8×Φ19
100	229	220	160	132	22	3	8×Φ19
125	254	250	210	184	26	3	8×Φ19
150	267	285	240	211	26	3	8×Φ23
200	229	340	295	266	26	3	8×Φ23
250	330	395	350	319	28	4	12×Φ23
300	356	445	400	370	28	4	12×Φ23
350	381	505	460	429	30	4	16×Φ23
400	406	565	515	480	32	4	16×Φ28
450	432	615	565	530	32	4	20×Φ28
500	457	670	620	582	34	4	20×Φ28
600	508	780	725	682	36	5	20×Φ31

Resilient Seated Gate Valve (Non-rising Stem)

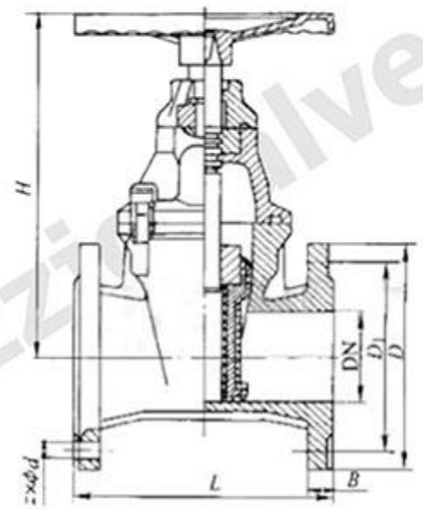

Z40X-10/16 DN50~DN600mm 2"~24" Class150Non-rising Stem Resilient Seated Gate Valve									
DN		L/mm	D/mm	D_1		z×Φd		B/mm	H/mm
mm	in			PN10	PN16	PN10	PN16		
50	2	178	165	125		4×Φ19		19	340
65	2.5	190	185	145		4×Φ19		19	370
80	3	203	200	160		8×Φ19		19	410
100	4	229	220	180		8×Φ19		19	450
125	5	254	250	210		8×Φ19		19	480
150	6	267	285	240		8×Φ23		19	550
200	8	292	340	295		8×Φ23	12×Φ23	20	630
250	10	330	405	350	355	12×Φ23	12×Φ28	22	750
300	12	356	460	400	410	12×Φ23	12×Φ28	24.5	820
350	14	381	520	460	470	12×Φ23	12×Φ28	26.5	980
400	16	406	580	515	525	16×Φ28	16×Φ31	28	1010
450	18	432	640	565	585	20×Φ28	20×Φ31	30	1270
500	20	457	715	620	650	20×Φ28	20×Φ34	31.5	1270
600	24	508	810 840	725	770	20×Φ31	20×Φ37	36	1390

Metal Seal Gate Valve

Features

1.Full Bore design.

2.Precisely machined brass/bronze seats on the wedge assures tight closure.

3.Maintenance-free and corrosion-resistant stem O-rings ensures higher durability.

4.Bidirectional flow direction.

5.Low operation torque.

6.FBE powder epoxy coating is optional.

7.Range of Working temperature: 0℃~425℃.

8.The materials of the valve disc, valve seat and sealing surface can be processed according to the medium pressure, temperature and PH value.

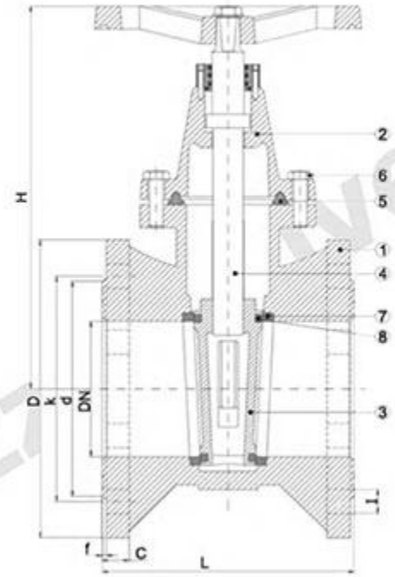

Metal Seated Gate Valve DN50~DN350 2"~14" Class150/Class300										
DN(mm)	PN	D	k	d	f	C	Φ-Q-ty	L	H	KG
50	10-16-25	165	125	99	3	20	Φ19x4	150	210	12
65	10-16-25	185	145	118	3	20	Φ19x4	170	230	16
80	10-16-25	200	160	132	3	22	Φ19x8	180	255	19
100	10-16	220	180	156	3	24	Φ19x8	190	300	24
100	25	235	190	156	3	28	Φ23x8	190	300	27
125	10-16	250	210	184	3	26	Φ19x8	200	350	38
125	25	270	220	184	3	30	Φ28x8	200	350	42
150	10-16	285	240	211	3	26	Φ23x8	210	410	50.5
150	25	300	250	211	3	34	Φ28x8	210	410	57.5
200	10	340	295	266	4	26	Φ23x8	230	480	79.5
200	16	340	295	266	4	30	Φ23x12	230	480	79.5
200	25	360	310	274	4	34	Φ28x12	230	480	88
250	10	395	350	319	4	28	Φ23x12	250	600	118
250	16	405	355	319	4	32	Φ28x12	250	600	118
250	25	425	370	330	4	36	Φ31x12	250	600	130
300	10	445	400	370	4	28	Φ23x12	270	690	165
300	16	460	410	370	4	32	Φ28x12	270	690	165
300	25	485	430	389	4	40	Φ31x16	270	690	181
350	10	505	460	429	4	30	Φ23x16	290	900	217
350	16	520	470	429	4	36	Φ28x16	290	900	217
350	25	555	490	448	4	44	Φ34x16	290	900	238

High Pressure Steam Gate Valve

Features

1. Medium: main steam.
2. Butt welding connection type.
3. Rising stem wedge type metal single disc.
4. Range of Working temperature: -20℃~600℃.
5. The valve body material is chromium molybdenum vanadium steel.
6. Valve seat sealing surface material is chromium molybdenum vanadium steel surfacing cobalt chromium tungsten alloy.

Main parts

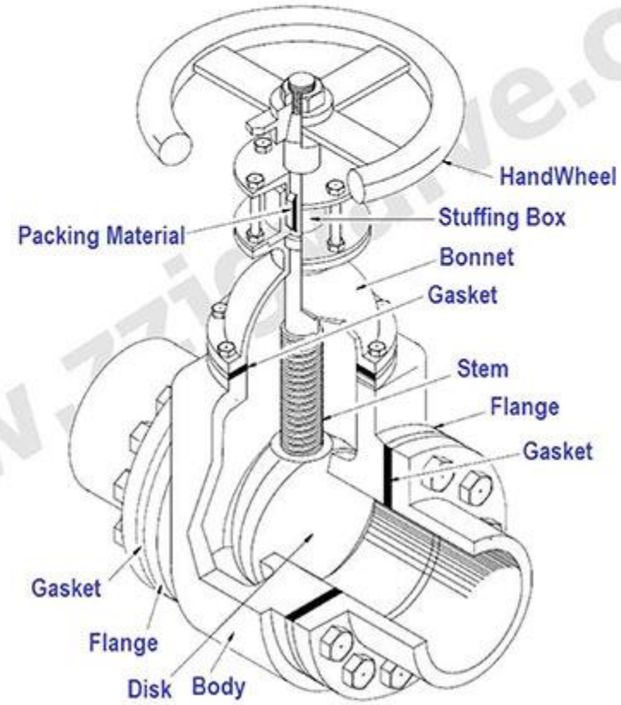

Applications

- These valves are used in thermal power plants to control the flow of steam and water at high temperatures without damaging valve seats.
- They are used in municipal water supply over long distances since they have a low-pressure drop.
- High-pressure gate valves are used in the transport petroleum and petroleum products.
- High-pressure gate valves are used in steel manufacturing plants.
- They are used to feed boiler systems.
- They are used in marine applications.
- They are used in transportation of chemicals and water.

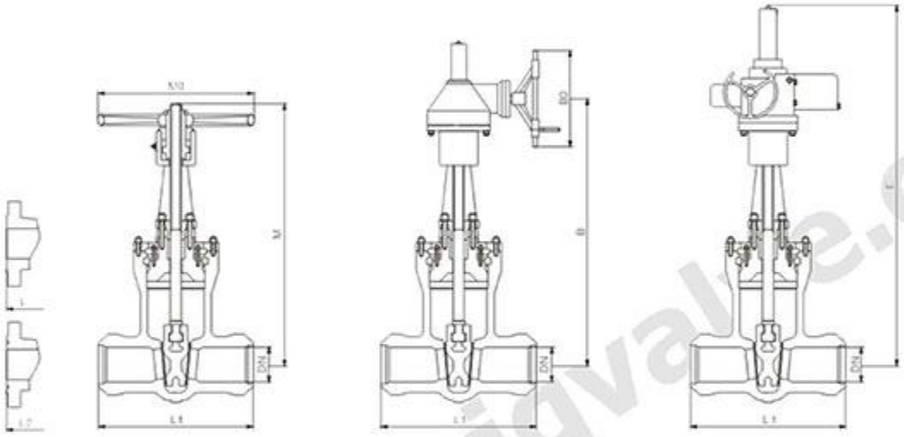

Manual power station gate valve, MA Bevel gear power station gate valve, BA Electric power station gate valve, EA

High Pressure Steam Gate Valve NPS2"~24" Class900								
NPS	L1 (BW)	L (RF)	L2 (RTJ)	MA		BA	EA	
				M	M0	B	B0	E
2	216	368	371	410	250	-	-	760
2-1/2	254	419	422	465	300	-	-	800
3	305	381	384	500	300	-	-	870
4	356	457	460	600	350	-	-	1050
5	432	559	562	660	400	-	-	1110
6	508	610	613	720	500	745	460	1170
8	660	737	740	875	600	945	460	1375
10	787	838	841	1015	600	1070	530	1515
12	914	965	968	1175	700	1230	530	1675
14	991	1029	1038	1300	800	1400	600	1800
16	1092	1130	1140	-	-	1550	600	1950
18	-	1219	1232	-	-	1690	600	2240
20	-	1321	1334	-	-	1855	600	2500
24	-	1549	1568	-	-	2200	600	2900

High Pressure Steam Gate Valve NPS2"~24" Class1500								
NPS	L1 (BW)	L (RF)	L2 (RTJ)	MA		BA	EA	
				M	M0	B	B0	E
2	216	368	371	410	250	-	-	760
2-1/2	254	419	422	465	300	-	-	800
3	305	470	473	500	300	-	-	870
4	406	546	549	600	400	-	-	1050
5	483	673	676	660	500	-	-	1110
6	559	705	711	720	600	745	460	1170
8	711	832	841	875	600	945	460	1375
10	864	991	1000	1015	700	1070	530	1515
12	991	1130	1146	1175	700	1230	530	1675
14	1067	1257	1276	1300	800	1400	600	1800
16	1194	1384	1407	-	-	1550	600	1950
18	1364	1537	1559	-	-	1690	600	2240
20	1473	1664	1686	-	-	1855	600	2500
24	-	1943	1972	-	-	2200	600	2900

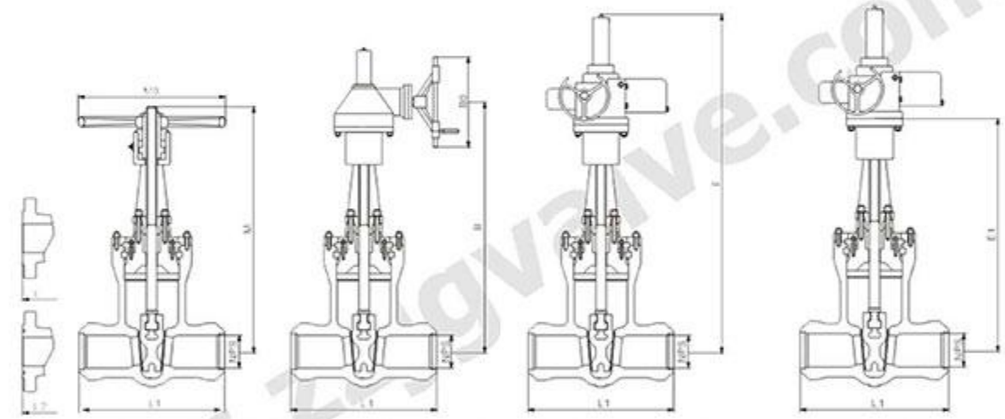

Manual power station gate valve, MA Bevel gear power station gate valve, BA Electric power station gate valve, EA Electric power station gate valve, EA

High Pressure Steam Gate Valve NPS2"~18" Class2000, Class2500								
NPS	L1 (BW)	L (RF)	L2 (RTJ)	MA		BA	EA	
				M	M0	B	B0	E
2	279	451	454	410	250	-	-	760
2-1/2	330	508	514	465	300	-	-	800
3	368	578	584	500	300	-	-	870
4	457	673	683	600	400	-	-	1050
5	533	794	807	660	500	-	-	1110
6	610	914	927	720	600	745	460	1170
8	762	1022	1038	875	600	945	460	1375
10	914	1270	1292	1015	700	1070	530	1515
12	1041	1422	1444	1175	700	1230	530	1675
14	1118	-	-	1300	800	1400	600	1800
16	1245	-	-	-	-	1550	600	1950
18	1397	-	-	-	-	1690	600	2240

Nomonal Pressure		Class 3500
NPS	L1 (BW)	EA E1
2-1/2	390	580
3	440	620
4	540	720
5	616	796
6	692	857
8	846	1041
10	1000	1197
12	1124	1338
14	1219	1455
18	1499	1915

Nomonal Pressure		Class 4500
NPS	L1 (BW)	EA E1
2-1/2	390	836
3	440	981
4	540	1086
5	616	1281
6	692	1347
8	846	1711
10	1000	1993
-	-	-
-	-	-
-	-	-

API Wedge Gate Valve

Features

1. Range of Working temperature: 0℃~425℃.
2. Connecting type: Flange BW.
3. Medium: water, steam, oil, acid, etc.
4. Rising stem wedge type metal single disc.
5. Valve seat sealing surface material is high hardness alloy.

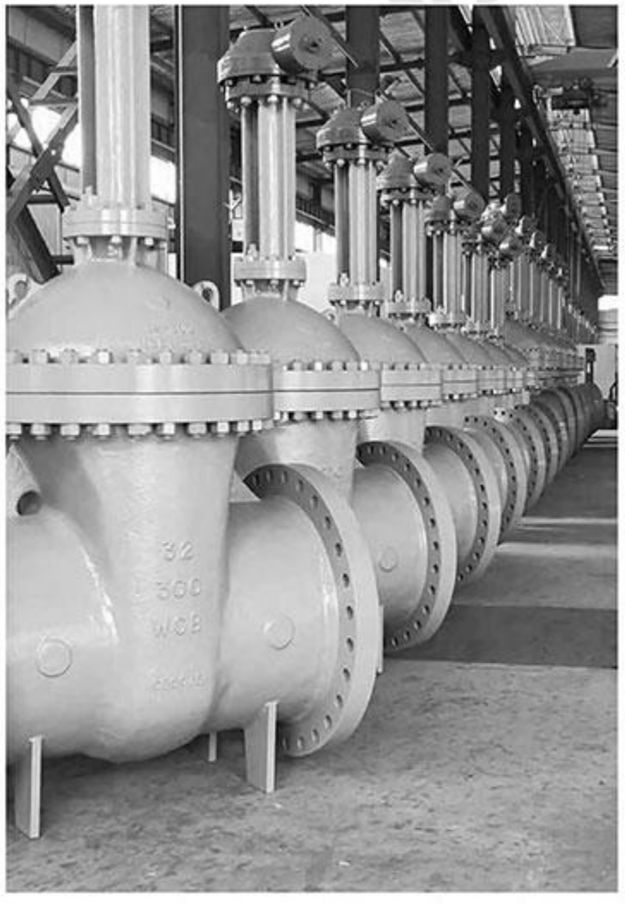

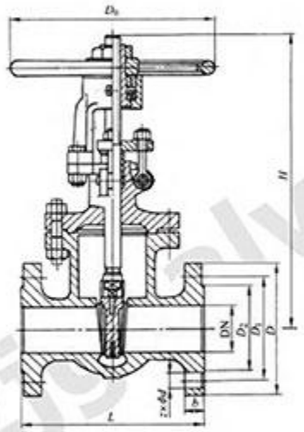

Type1- Z41Y NPS2"~36" Class150								
DN/in	L	H	D	D_1	D_2	b	z×Φd	D_0
2	178	409	152	120.5	92	19.1	4×Φ19	200
3	203	470	190	152.5	127	23.9	4×Φ19	250
4	229	590	229	190.5	157	23.9	8×Φ22	300
6	267	630	279	241.5	216	25.4	8×Φ22	300
8	292	960	343	298.5	270	28.5	8×Φ22	350
10	330	1158	406	362	324	30.2	12×Φ25	400
12	356	1378	483	432	381	31.8	12×Φ25	450
14	381	1543	533	176.5	413	35	12×Φ29	500
16	406	1738	597	539.5	470	36.6	16×Φ29	600
18	432	1959	635	578	533	39.7	16×Φ32	600
20	457	2214	698	635	584	42.9	20×Φ32	680
24	508	2599	813	749.5	692	47.7	20×Φ35	760
30	610	3183	985	914	857	74.5	28×Φ35	915
36	711	3737	1170	1086	1022	90.5	32×Φ41	915

Type2- Z41Y NPS2"~50" Class300								
DN/in	L	H	D	D_1	D_2	b	z×Φd	D_0
2	216	424	165	127	92	22.6	8×Φ19	200
3	283	656	210	168	127	28.5	8×Φ22	250
4	305	615	254	200	157	31.8	8×Φ22	250
6	403	795	318	270	216	36.6	12×Φ22	350
8	419	1012	381	330	270	41.3	12×Φ25	400
10	457	1231	444	387.5	324	47.7	16×Φ29	450
12	502	1450	521	451	381	50.8	16×Φ32	500
14	762	1645	584	514.5	413	57	20×Φ32	600
16	838	1814	648	571.5	470	57.2	20×Φ35	600
18	914	1943	711	628.5	533	60.4	24×Φ35	680
50	991	2154	775	686	584	63.5	24×Φ35	760
24	1143	2553	914	813	692	69.9	24×Φ41	915

Type3- Z41Y NPS2"~24" Class600								
DN/in	L	H	D	D_1	D_2	b	z×Φd	D_0
2	292	458	165	127	92	25.4	8×Φ19	250
3	356	570	210	168	127	31.8	8×Φ22	250
4	432	690	273	216	157	38.1	8×Φ25	350
6	559	910	356	292	216	47.7	12×Φ29	450
8	600	1064	419	349	270	55.6	12×Φ32	500
10	787	1257	508	432	324	63.5	16×Φ35	600
12	838	1468	559	489	381	66.7	20×Φ35	680
14	889	1623	603	527	413	69.9	20×Φ38	760
16	991	1816	686	603	470	76.2	20×Φ41	760
18	1092	2100	743	654	533	82.6	20×Φ45	915
20	1194	2250	813	724	584	88.9	24×Φ45	950
24	1397	2730	940	838	692	102	24×Φ51	1000

Flat Gate Valve

Features

1. Range of Working temperature: 0℃~425℃.
2. Connecting type: Flange BW.
3. Medium: water, steam, oil, acid, etc.
4. Rising stem wedge type metal single disc.
5. Valve seat sealing surface material is chromium stainless steel + PTFE.

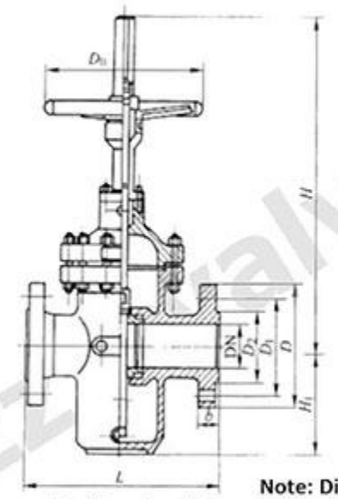

with diversion hole

Note: Diversion hole structure, overall dimensions H1+1.2DN.

Type1- Z43F/KZ43F DN50~DN1000 2"~40" Class150 Flanged Single Gate Flat Gate Valve										
1.0MPa										
DN(mm)	L	D	D_1	D_2	b	z×Φd	H	H_1	D_0	Weight/kg
50	178	160	125	100	20	4×Φ18	450	130	250	25
65	190	180	145	120	20	4×Φ18	550	160	300	44
80	203	195	160	135	22	4×Φ18	610	180	300	49
100	229	215	180	155	22	8×Φ18	700	214	300	57
125	254	245	210	185	24	8×Φ18	798	257	350	104
150	267	280	240	210	24	8×Φ23	895	300	350	115
200	292	335	295	265	26	8×Φ23	1130	388	350	154
250	330	390	350	320	28	12×Φ23	1290	475	400	264
300	356	440	400	368	28	12×Φ23	1480	547	450	330
350	381	500	460	428	30	16×Φ23	1600	625	450	506
400	406	565	515	482	32	16×Φ25	1850	712	500	616
450	432	615	565	532	32	20×Φ25	2080	785	500	858
500	457	670	620	585	34	20×Φ25	2300	880	600	1155
600	508	780	725	685	36	20×Φ30	2680	1045	800	1848
700	610	895	840	800	40	24×Φ30	3080	1190	800	2475
800	660	1010	950	905	44	24×Φ34	3491	1360	1000	3498
900	711	1110	1050	1005	46	28×Φ34	3897	1510	1000	4686
1000	811	1220	1180	1115	50	28×Φ34	4317	1715	1200	6094

1.6MPa										
DN(mm)	L	D	D_1	D_2	b	z×Φd	H	H_1	D_0	Weight/kg
50	178	160	125	100	16	4×Φ18	450	130	250	27
65	190	180	145	120	18	4×Φ18	550	160	300	46
80	203	195	160	135	20	8×Φ18	610	180	300	52
100	229	215	180	155	20	8×Φ18	700	214	300	60
125	254	245	210	185	22	8×Φ18	798	257	350	110
150	267	280	240	210	24	8×Φ23	895	300	350	126
200	292	335	295	265	26	12×Φ23	1130	388	350	165
250	330	405	355	320	30	12×Φ25	1480	547	450	385
300	356	460	410	375	30	12×Φ25	1480	547	450	385
350	381	520	470	435	34	16×Φ25	1660	625	450	550
400	406	580	525	485	36	16×Φ25	1850	712	500	671
450	432	640	585	545	40	20×Φ30	2080	785	500	1069
500	457	705	650	608	44	20×Φ34	2300	880	600	1320
600	508	840	770	718	48	20×Φ41	2680	1045	800	2035
700	610	910	840	788	50	24×Φ41	3080	1190	800	3201
800	660	1020	950	898	52	24×Φ41	3491	1360	1000	3960
900	11	1120	1050	998	54	28×Φ41	3897	1510	1000	5445
1000	811	1255	1170	1110	56	28×Φ48	4317	1715	1200	6776

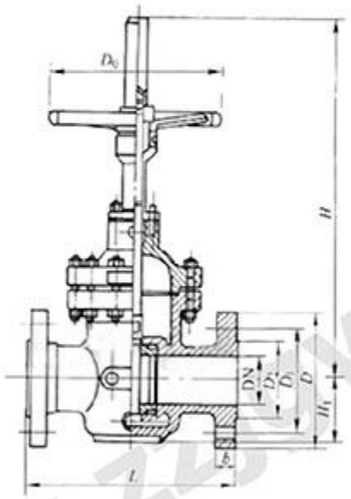

no diversion hole

Type2- Z43WF/KZ43WF DN50~DN1000 2"~40" Class150 Flanged Single Gate Flat Gate Valve										
1.0MPa										
DN(mm)	L	D	D_1	D_2	b	z×Φd	H	H_1	D_0	Weight/kg
50	178	160	125	100	20	4×Φ18	450	80	250	23
65	190	180	145	120	20	8×Φ18	550	95	300	40
80	203	195	160	135	22	8×Φ18	610	100	300	45
125	254	245	210	185	24	8×Φ18	798	132	350	95
150	267	280	240	210	24	8×Φ23	895	150	350	105
200	292	335	295	265	26	8×Φ23	1130	188	350	140
250	330	390	350	320	28	12×Φ23	1290	225	400	240
300	356	440	400	368	28	12×Φ23	1480	247	450	300
350	381	500	460	428	30	16×Φ23	1660	275	450	460
400	406	565	515	482	32	20×Φ25	1850	312	500	560
450	432	615	565	532	32	20×Φ25	2080	335	500	780
500	457	670	620	585	34	20×Φ30	2300	380	600	1050
600	508	780	725	685	36	20×Φ30	2680	445	800	1680
700	610	895	840	800	40	24×Φ30	3080	490	800	2250
800	660	1010	950	905	44	24×Φ34	3491	560	1000	4260
900	711	1110	1050	1005	46	28×Φ34	3897	610	1000	4260
1000	811	1220	1180	1115	50	28×Φ34	4317	715	1200	5540

1.6MPa										
DN(mm)	L	D	D_1	D_2	b	z×Φd	H	H_1	D_0	Weight/kg
50	178	160	125	100	16	4×Φ18	450	80	250	25
65	190	180	145	120	18	4×Φ18	550	95	300	42
80	203	195	160	135	20	8×Φ18	610	100	300	48
100	229	215	180	155	20	8×Φ18	700	114	300	55
125	254	245	210	185	22	8×Φ18	798	132	350	100
150	267	280	240	210	24	8×Φ23	895	150	350	115
200	292	335	295	265	26	12×Φ23	1130	188	350	150
250	330	405	355	320	30	12×Φ25	1290	225	400	260
300	356	460	410	375	30	12×Φ25	1480	247	450	350
350	381	520	470	435	34	16×Φ25	1660	275	450	500
400	406	580	525	485	36	16×Φ30	1850	312	500	610
450	432	640	585	545	40	20×Φ30	2080	335	500	970
500	457	705	650	608	44	20×Φ34	2300	380	600	1200
600	508	840	770	718	48	20×Φ41	2680	445	800	1850
700	610	910	840	788	50	24×Φ41	3080	490	800	2910
800	660	1020	950	898	52	24×Φ41	3491	560	1000	3600
900	711	1120	1050	998	54	28×Φ41	3897	610	1000	4950
1000	811	1255	1170	1110	56	28×Φ48	4317	715	1200	6160

Knife Gate Valve

ZZJG VALVE

Features

1.Light and flexible operation, smooth channel, small flow resistance, light weight.

2.Small installation space, easy to install and disassemble.

3. Corrosion resistance and high sealing quality.

4. Flexible PTFE, reliable sealing and flexible operation.

5. The gate can effectively cut off all kinds of debris in the medium.

6. Range of Working temperature: 0℃~100℃.

Main parts

1 Body

2 Plate

3 U-shaped seal

4 Spindle

5 Spindle nut

6 Columns

7 Bearing block

8 Screws and Friction washer

9 Seal

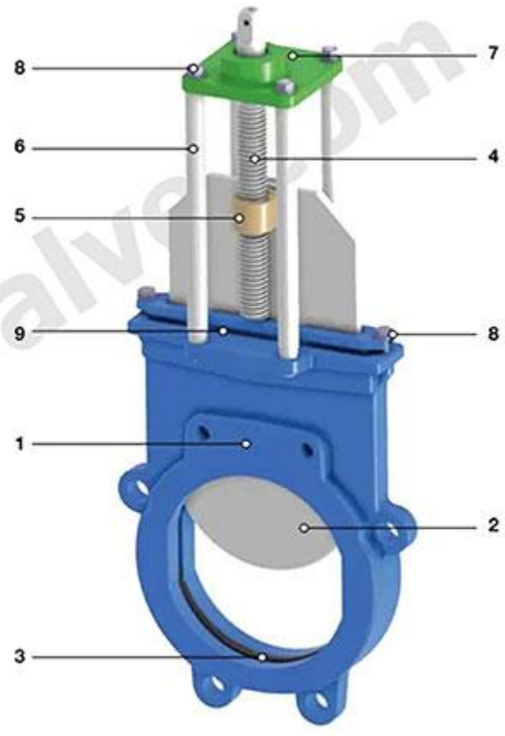

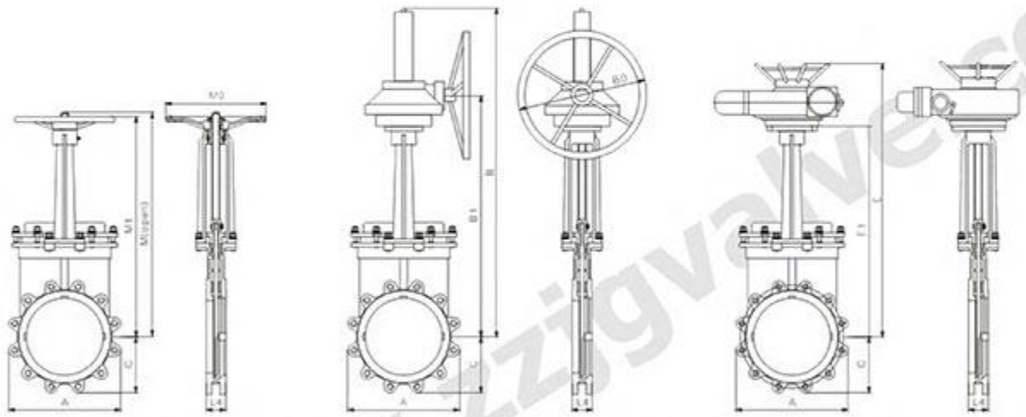

Manual wafer type knife gate valve, MA Bevel gear wafer type knife gate valve, BA Electric wafer type knife gate valve, EA

Nomonal Pressure													PN10/PN16
DN	NPS	L4 (WF)	A	C	MA			BA			EA		N-M
					M	M1	M0	B	B1	B0	E	E1	
80	3	51	200	100	435	343	220	-	-	-	599	429	8-M16
100	4	51	229	115	516	381	220	-	-	-	645	470	8-M16
150	6	57	285	143	654	463.5	280	-	-	-	1125	555	8-M20
200	8	70	343	172	832	584	360	880	580	310	1289	669	12-M20
250	10	70	406	203	1017	711	360	1020	670	310	1349	769	12-M24
300	12	76	483	241	1171	810	400	1220	820	310	1454	869	12-M24
350	14	76	533	266.5	1328	936	400	1375	900	460	1552	968	16-M24
400	16	89	597	298.5	1530	1130	400	1560	1020	460	1657	1072	16-M27
450	18	89	635	317.5	1709	1225	530	1720	1150	460	1805	1205	20-M27
500	20	114	698	349	1911	1368	530	1870	1250	460	1918	1318	20-M30
600	24	114	813	406.5	2171	1549	600	2220	1500	460	2223	1525	20-M33
700	28	127	928	464	2420	1700	600	2570	1750	460	2846	1763	24-M33
800	32	127	1045	522.5	2692	1841	680	3030	2000	460	3031	1948	24-M36
900	36	154	1168	585	3276	2286	680	3430	2300	600	3240	2157	28-M36
1000	40	165	1283	642	-	-	-	3470	2500	600	3431	2350	28-M39
1200	48	190	1495	748	-	-	-	4230	2800	600	4330	3025	32-M45
1400	56	190	1715	858	-	-	-	4520	3120	600	-	-	36-M45
1600	64	318a	2035	1018	-	-	-	5330	3730	600	-	-	40-M52

Cam-Slide Line Blind Valve

ZZJG VALVE

Features

1.100 % positive isolation.

2.NO line spreading required.

3.Multi-bolt design.

4.Quick plate movement.

5.Positive positioning.

6.Seals in spectacle plate.

7.Adaptable design.

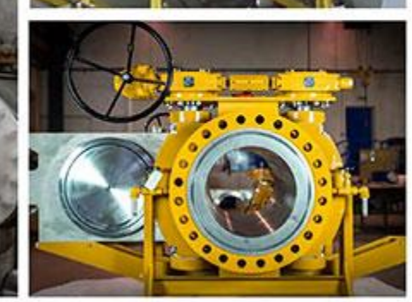

Drawing and Dimension Table for Cam-Set (ASME 150#)

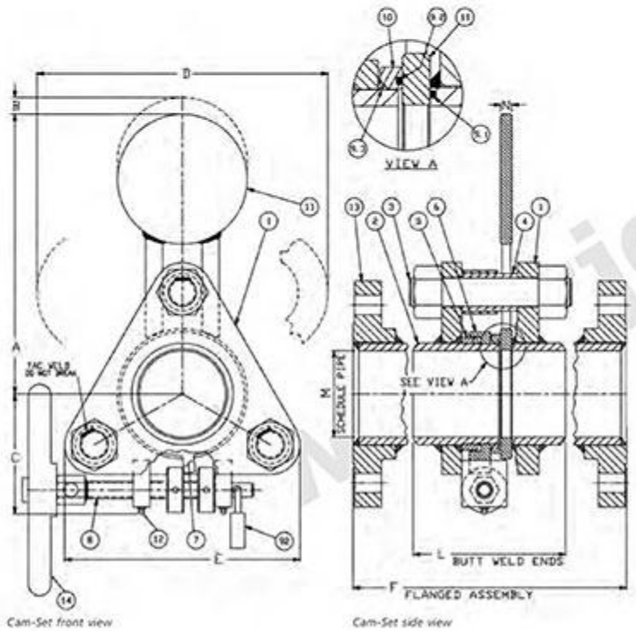

No.	Parts
1	Body
2	Body Pipe
3	Body Bolts
4	Body Bolt Spacer
5	CAMS
6	Sealing Actuator
7	Actuator Lever
8	Actuator Screw Assembly
9.1	Seal Ring
9.2	Seal Ring
9.3	Seal Ring
10	Seal Carrier
1 1	Spectacle Plate Assembly
12	Grease Fitting
13	Flange 150 ASME Standard
14	Han dwheel
92	Lock

Size	A	B	C	D	E	F	L	M	N
DN25 / 1"	127	13	64	159	127	178	165	80	13
DN40 / 3/2"	159	16	76	197	152	190	178	80	13
DN50 / 2"	178	10	83	229	165	203	190	80	13
DN80 / 3"	229	19	102	289	203	222	203	80	13
DN100 / 4"	279	19	127	356	235	248	229	80	13
DN125 / 5"	349	25	140	438	298	292	267	80	16
DN150 / 6"	394	25	171	495	337	292	267	80	16
DN200 / 8"	502	41	200	635	400	317	n/a	80	16
DN250 / 10"	654	44	229	816	483	356	330	60	16
DN300 / 12"	762	57	279	953	591	381	356	80S	22
DN350 / 14"	800	57	279	1003	625	406	381	xH	22
DN400 / 16"	908	89	330	1137	71 1	432	406	60	22
DN450 / 18"	975	76	368	1232	813	686	660	60	25
DN500 / 20"	1111	73	413	1403	857	71 1	686	60	25
DN600 / 24"	1245	83	470	1581	978	838	813	60	38

Drawing and Dimension Table for Cam-Slide (ASME 150#)

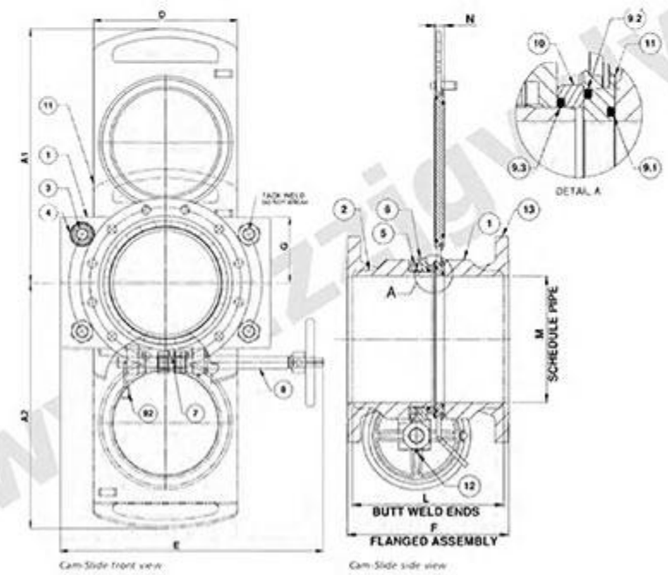

No.	Parts
1	Body
2	Body Pipe
3	Body Bolts
4	Body Bolt Spacer
5	CAMS
6	Sealing Actuator
7	Actuator Lever
8	Actuator Screw Assembly
9.1	Seal Ring
9.2	Seal Ring
9.3	Seal Ring
10	Seal Carrier
1 1	Spectacle Plate Assembly
12	Grease Fitting
13	Flange 150 ASME Standard
14	Han dwheel
92	Lock

Size AME	Size DIN	A1	A2	D	E	F	G	L	M	N	Weight Kg / Lbs
1"	DN25	134	114	89	279	177.8 [7.00"]	51	166	1" SCH. 80	13	15/33
3/2"	DN40	159	140	102	323	190 [7.50"]	178	178	3/2" SCH. 80	13	25/55
2"	DN50	184	165	115	366	203.2 [8.00"]	77	192	2" SCH. 80	13	29/64
3"	DN80	263	251	170	268	222.3 [8.75"]	65	203.2	3" SCH. 80	12.7	35/77
4"	DN100	335	321	200	431	247.7 [9.75"]	90	228.7	4" SCH. 80	12.7	56/123
5"	DN125	388	371	228	462	292.1 [11.50"]	266.7	266.7	5" SCH. 80	14	75/165
6"	DN150	440	420	255	493	292.1 [11.50"]	108	266.7	6" SCH. 80	15.9	97/214
8"	DN200	510	497	300	573	317.5 [12.50"]	128	292.1	8" SCH. 80	15.9	115/254
10"	DN250	610	590	345	625	355.6 [14.00"]	163	330	10" SCH. 60	15.9	190/419
12"	DN300	725	702	410	750	381 [15.00"]	188	357	12" SCH.80S	22	270/595
14"	DN350	778	761	470	816	406.4 [16.00"]	213	381	14" SCH. 80	22.2	420/926
16"	DN400	783	761	486	931	432 [17.00"]	251	406	16" SCH. 60	22.4	496/1093
18"	DN450	881	856	547	1047	686 [27.00"]	282	660	18" SCH. 60	25	568/1230
20"	DN500	894	894	625	1250	711 [28.00"]	308	686	20" SCH. 60	26	1208/2663
24"	DN600	1073	1073	750	1500	838.2 [33.00"]	338	813	24" SCH. 60	31.8	1450/3197
28"	DN700	1252	1252	875	1750	914.4 [36.00"]	394	885	28" SCH. 30	37	1692/3730
30"	DN750	1341	1341	938	1875	868.8 [34.25"]	423	1016	30" SCH.20	40	1812/3996

Globe Valve

T-Pattern Globe Valve

Angle Globe Valve

Y-Pattern Globe Valve

Plunger Globe Valve

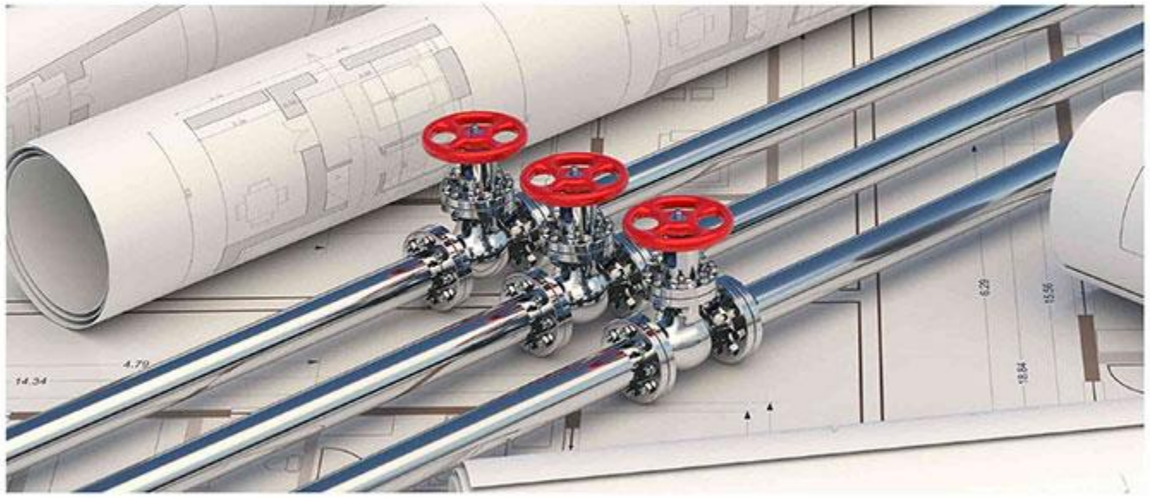

T-Pattern Globe Valve

Overview

The T-pattern is likely the oldest globe valve design since it was developed by the ancient Phoenicians. It is named for the valve's 90° stem versus pipeline orientation (i.e., the stem is at a right angle to the pipeline). The advantage of having the stem at 90° to the valve is that the seismic properties (i.e., the ability to withstand a seismic event) are enhanced.A T-pattern globe valve is also better at supporting an actuator atop the yoke since all the weight and stresses do not cause bending moments on the yoke arms and bonnet threads.

Features

1.A variety of valve disc forms are available.

2.Optional extended stem design.

3.Small opening and closing torque and long service life.

4.Fireproof design.

5.Sealing valve seat is soft or hard optional.

6.With flow throttling and regulating functions.

7.Reliable internal and external leakage sealing.

8.Sealing surface anti-corrosion and friction-resistant.

9.Range of working temperature: 0℃~550℃.

10.Connecting type: Flange, BW.

11.Application: Power plants, coal chemical industry, petrochemical industry, metallurgy, water system, etc.

Main Parts

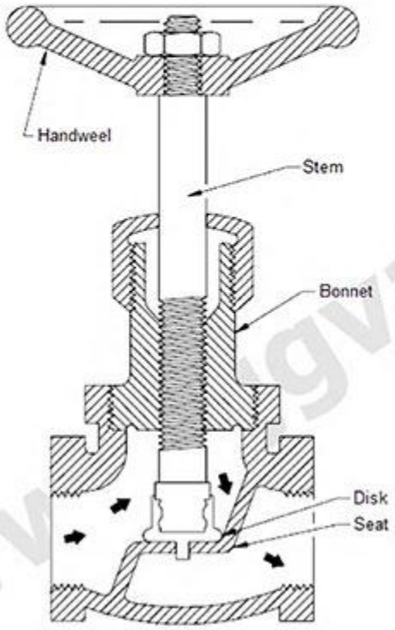

Applications

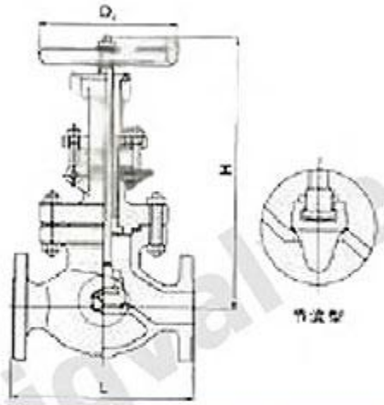

J41H/W DN15~DN480 1/2"~18" Class150/Class300 T-Pattern Globe Valve												
PN	DN	Main Connection Dimensions									Z43 Appearance	
	(mm)	L	D	D1	D2	D6	b	f	f1	Z-ϕd	H	D0
1.6MPa	15	130	95	65	45	-	14	2	-	4-14	119	75
	20	150	105	75	55	-	14	2	-	4-14	75	75
	25	160	115	85	65	-	14	2	-	4-14	75	75
	32	180	135	100	78	-	15	2	-	4-18	120	120
	40	200	146	110	85	-	16	2	-	4-18	120	120
	50	230	160	125	100	-	16	3	-	4-18	160	160
	65	290	180	145	120	-	18	3	-	4-18	-	-
	80	310	195	160	135	-	20	3	-	8-18	-	-
	100	350	215	180	155	-	20	3	-	8-18	-	-
	125	400	245	210	185	-	22	3	-	8-18	-	-
	150	480	280	240	210	-	24	3	-	8-23	-	-
2.5MPa	15	130	95	65	45	-	16	2	-	4-14	230	120
	20	150	105	75	55	-	16	2	-	4-14	275	140
	25	160	115	85	65	-	16	2	-	4-14	295	160
	32	180	135	100	78	-	18	2	-	4-18	335	160
	40	200	145	110	85	-	18	3	-	4-18	380	200
	50	230	160	125	100	-	20	3	-	4-18	398	240
	65	290	180	145	120	-	22	3	-	8-18	433	280
	80	310	195	160	135	-	22	3	-	8-18	468	320
	100	350	230	190	160	-	24	3	-	8-23	520	360
	125	400	270	220	188	-	28	3	-	8-25	556	400
	150	480	300	250	218	-	30	3	-	8-25	674	400
	200	600	360	310	278	-	34	3	-	12-25	806	450
	250	650	425	370	332	-	36	3	-	12-30	880	550
	300	750	485	430	390	-	40	4	-	16-34	995	800
4.0MPa	15	130	95	65	45	40	16	2	4	4-14	230	120
	20	150	105	75	55	51	16	2	4	4-14	275	140
	25	160	115	85	65	58	16	2	4	4-14	295	160
	32	180	135	100	78	66	18	3	4	4-18	308	160
	40	200	145	110	85	76	18	3	4	4-18	354	200
	50	230	160	125	100	88	20	3	4	4-18	380	240
	65	290	180	145	120	110	22	3	4	8-18	420	280
	80	310	195	160	135	121	22	3	4	8-18	462	320
	100	350	230	190	160	150	24	3	4.5	8-23	506	360
	125	400	270	220	188	176	28	3	4.5	8-25	556	400
	150	480	300	250	218	204	30	3	4.5	8-25	692	400
	200	600	375	320	282	260	38	3	4.5	12-30	806	450
6.4MPa	15	170	105	75	55	41	18	2	4	4-18	210	140
	20	190	125	90	68	51	20	2	4	4-18	248	160
	25	210	135	100	78	58	22	2	4	4-18	275	180
	32	230	150	110	82	66	24	3	4	4-23	355	200
	40	260	165	125	95	76	24	3	4	4-23	395	240
	50	300	175	135	105	88	26	3	4	4-23	450	280
	65	340	200	160	130	110	28	3	4	8-23	494	320
	80	380	210	170	140	121	30	3	4	8-23	531	360
	100	430	250	200	168	150	32	3	4.5	8-25	580	400
	150	550	340	280	240	204	38	3	4.5	8-34	710	450

Angle Globe Valve

Features

1. Plug-shaped valve disc, sealing surface is flat or conical, and the valve disc moves linearly along the center line.
2. Forced sealing valve: Pressure applied to valve disc to force the sealing surface no leakage.
3. Cut-off valve: Used to connect or cut off the medium in the pipeline.
4. Application condition: Small diameter pipelines and is suitable for steam, oil, water and other media ≤425℃.
5. Range of working temperature: 0℃~550℃.
6. Connecting type: Flange, BW.
7. Application: Power plants, coal chemical industry, petrochemical industry, metallurgy, water system, etc.

Main Parts

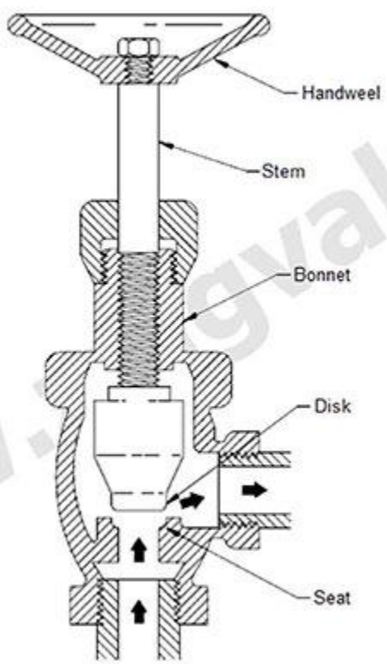

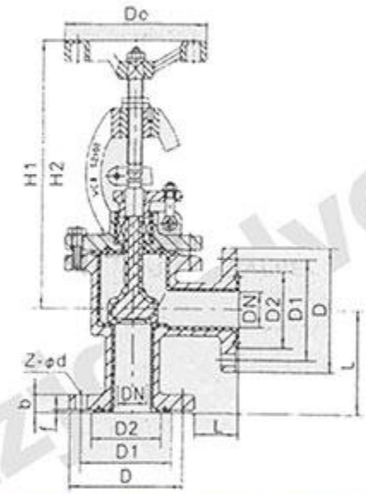

DN(mm)	NPS(inch)	L	D	D1	D2	f	b	Z-Φd	Do	H1	H2	W(kg)
		PN1.0(MPa)										
15	1/2	90	95	65	45	2	14	4-Φ14	100	240	265	7
20	3/4	95	105	75	55	2	16	4-Φ14	100	245	270	7.5
25	1	100	115	85	65	2	16	4-Φ14	120	250	275	8
32	11/4	105	135	100	78	2	18	4-Φ18	120	260	290	12
40	11/2	115	145	110	85	3	18	4-Φ18	140	290	325	14
50	2	125	160	125	100	3	20	4-Φ18	140	300	355	19
65	21/2	145	180	145	120	3	20	4-Φ18	160	355	400	27
80	3	155	195	160	135	3	22	4-Φ18	160	400	450	42
100	4	175	215	180	155	3	22	8-Φ18	180	455	495	50
125	5	200	245	210	185	3	24	8-Φ18	180	530	560	64
150	6	225	280	240	210	3	24	8-Φ23	240	605	650	85
200	8	275	335	295	265	3	26	8-Φ23	240	650	770	105
250	10	325	390	350	320	3	28	12-Φ23	280	680	800	135
300	12	375	440	400	368	4	28	12-Φ28	280	710	835	155
		PN1.6(MPa)										
15	1/2	90	95	65	45	2	14	4-Φ14	100	240	265	7
20	3/4	95	105	75	55	2	16	4-Φ14	100	245	270	7.5
25	1	100	115	85	65	2	16	4-Φ14	120	250	275	8.5
32	11/4	105	135	100	78	2	18	4-Φ18	140	260	290	12
40	11/2	115	145	110	85	3	18	4-Φ18	140	290	325	14
50	2	125	160	125	100	3	20	4-Φ18	160	300	355	19
65	21/2	145	180	145	120	3	20	4-Φ18	180	355	400	27
80	3	155	195	160	135	3	22	8-Φ18	240	400	450	42
100	4	175	215	180	155	3	24	8-Φ18	240	455	495	50
125	5	200	245	210	185	3	26	8-Φ18	280	530	560	64
150	6	225	280	240	210	3	28	8-Φ23	320	605	650	85
200	8	275	335	295	265	3	30	12-Φ23	360	650	770	105
		PN2.5(MPa)										
15	1/2	90	95	65	45	2	16	4-Φ14	120	245	270	7.5
20	3/4	95	105	75	55	2	16	4-Φ14	120	250	275	8.8
25	1	100	115	85	65	2	16	4-Φ14	140	260	290	11
32	11/4	105	135	100	78	2	18	4-Φ18	140	290	325	13
40	11/2	115	145	110	85	3	18	4-Φ18	160	300	335	18
50	2	125	160	125	100	3	20	4-Φ18	180	355	400	31

Y-Pattern Globe Valve

Features

1.The friction between the sealing surfaces is small during the opening and closing process.

2.Relatively durable.

3.The opening height is not large.

4.Easy to manufacture.

5.Easy to maintain.

6.Applicable not only to medium and low pressure, but also to high pressure.

7.It dose not change the flow direction, smaller flow resistance.

8.Range of working temperature: 0℃~600℃.

9.Connecting type: Flange, BW.

10.Application: Petrochemical, metallurgy, chemical industry, power station, pharmaceutical, etc.

Main Parts

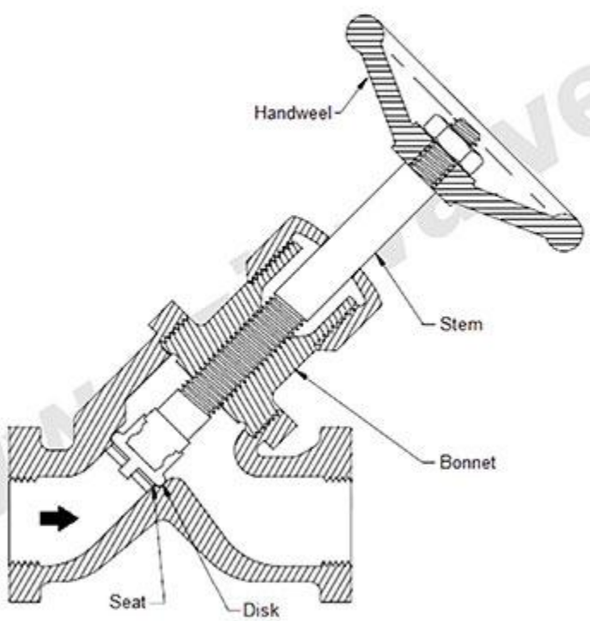

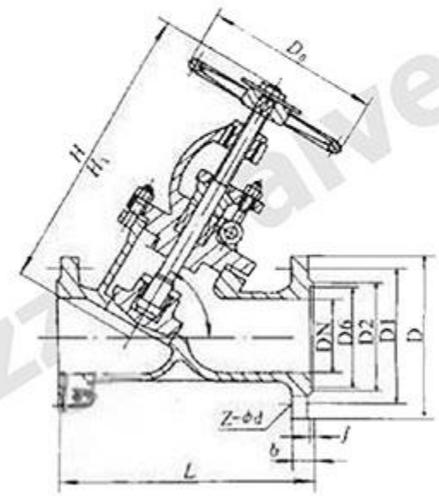

J45H/J45Y DN20~DN200 3/4"~8" Class150/Class300/Class600 Y-Pattern Globe Valve					
DN(mm)	Dimensions (mm)				
	L	D	H	H1	D0
20	150	105	195	215	90
25	160	115	265	290	100
32	180	135	290	320	120
40	200	145	315	355	140
50	230	160	325	365	160
65	290	180	350	385	180
80	310	195	445	510	220
100	350	215	460	540	240
125	400	245	530	615	280
150	480	280	600	685	320
200	600	335	-	-	-

Plunger Globe Valve

Features

1. Relying on the principle of the globe valve, the valve disc changed as a cylinder.
2. The inclined cone surface of the plunger end and the cone surface of the valve seat complete the opening and closing.
3. The sealing is reliable and durable, thus extending the service life of the valve.
4. Connecting type: Flange, BW.
5. Range of working temperature: 0℃~600℃.
6. By adjusting the pre-tightening force of the middle flange bolts, the lateral force generated by the compression of the sealing ring is sealed with the outer circle of the plunger on the middle hole surface of the valve body, thus ensuring the sealing performance of the valve.
7. Combining the leak-free advantages of the plunger valve and the fast opening and closing characteristics of the stop valve, its superiority is far better than that of ordinary stop valves.
8. Application: Petrochemical, metallurgy, chemical industry, power station, pharmaceutical, etc.

Main Parts

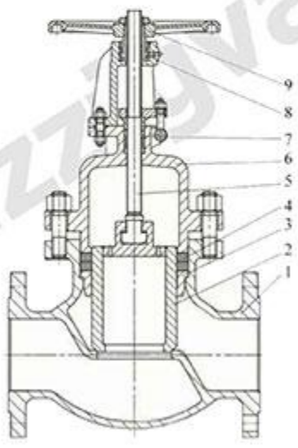

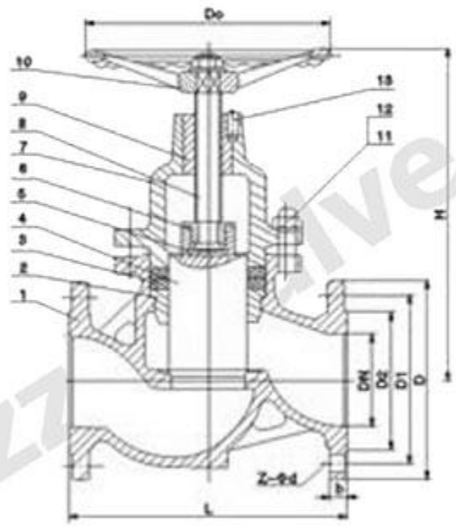

UJ41H/UJ41Y DN15~DN500 1/2"~20" Class150/Class300/Class600/Class900 Pluger Globe Valve														
1.6MPa						UJ41H-16C					UJ41W-16CP/R			
DN(mm)		15	20	25	32	40	50	65	80	100	125	150	200	250
Main Dimensions (mm)	L	130	150	160	180	200	230	290	310	350	400	480	600	650
	D	95	105	115	135	145	160	180	195	215	245	280	335	405
	D1	65	75	85	100	110	125	145	160	180	210	240	295	355
	D2	45	55	65	78	85	100	120	135	155	185	210	265	320
	b	14	14	14	16	16	16	18	20	20	22	24	26	30
	Z-Φd	4-Φ14	4-Φ14	4-Φ14	4-Φ18	4-Φ18	4-Φ18	4-Φ18	8-Φ18	8-Φ18	8-Φ18	8-Φ23	12-Φ23	12-Φ25
	H	133	170	178	195	230	250	272	300	312	365	400	460	940
Weight	kg	3.6	4.5	6	8	11	15	21	32	44	62	85	148	260
2.5MPa						UJ41H-25C					UJ41W-25CP/R			
DN (mm)		15	20	25	32	40	50	65	80	100	125	150	200	250
Main Dimensions (mm)	L	130	150	160	180	200	230	290	310	350	400	480	600	650
	D	95	105	115	135	145	160	180	195	230	270	300	360	425
	D1	65	75	85	100	110	125	145	160	190	220	250	310	370
	D2	45	55	65	78	85	100	120	135	160	188	218	278	332
	b	16	16	14	18	18	20	22	22	24	27	30	34	36
	Z-Φd	4-Φ14	4-Φ14	4-Φ14	4-Φ18	4-Φ18	4-Φ18	8-Φ18	8-Φ18	8-Φ23	8-Φ25	8-Φ25	12-Φ30	12-Φ30
	H	133	170	178	195	230	250	272	300	312	365	410	470	940
Weight	kg	3.5	4.5	6	8	11	16	22	32	48	65	90	165	280
4.0MPa						UJ41H-40C					UJ41W-40CP/R			
DN (mm)		15	20	25	32	40	50	65	80	100	125	150	200	250
Main Dimensions (mm)	L	130	150	160	180	200	230	290	310	350	400	480	600	650
	D	95	105	115	135	145	160	180	195	230	270	300	375	445
	D1	65	75	85	100	110	125	145	160	190	220	250	320	385
	D2	45	55	65	78	85	100	125	135	160	188	218	282	345
	D6	40	51	58	66	76	88	110	121	150	176	204	260	313
	b	16	16	16	18	18	20	22	22	24	28	30	38	42
	Z-Φd	4-Φ14	4-Φ14	4-Φ18	4-Φ18	4-Φ18	4-Φ18	8-Φ18	8-Φ18	8-Φ23	8-Φ25	8-Φ25	12-Φ30	12-Φ34
	H	133	170	178	195	230	250	272	300	312	365	410	580	940
Weight	kg	3.5	4.5	6	8	11	16	22	32	48	75	120	185	320

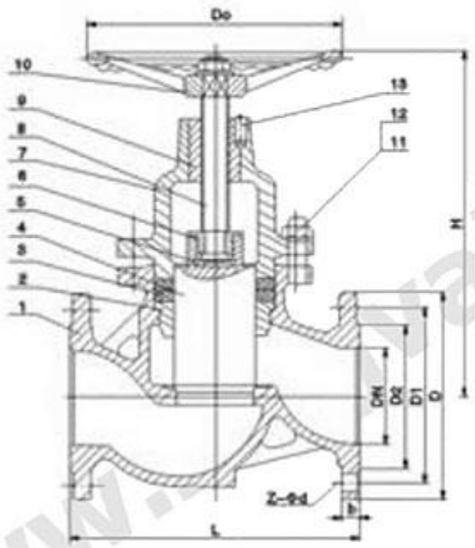

Check Valve

Multifunctional Check Valve

Lift Check Valve

Swing Check Valve

Wafer Check Valve

Tiny Drag Slow Shut Check Valve

Rubber Flap Check Valve

Three-stage Slow-closing Check Butterfly Valve

Hydraulically Controlled Check Butterfly Valve With Count Weight

UJ41H/UJ41Y DN15~DN500 1/2"~20" Class150/Class300/Class600/Class900 Pluger Globe Valve														
6.4MPa						U41H-64C					UJ41H-64P/R			
DN (mm)		15	20	25	32	40	50	65	80	100	125	150	200	250
Main Dimensions (mm)	L	170	190	210	230	260	300	340	380	430	500	550	650	775
	D	105	125	135	150	165	175	200	210	250	295	340	405	470
	D1	75	90	100	110	125	135	160	170	200	240	280	345	400
	D2	55	68	78	82	95	105	130	140	168	202	240	300	352
	D6	40	51	58	66	76	88	110	121	150	176	204	260	313
	b	18	20	22	24	24	26	28	30	32	36	38	44	48
	Z-Φd	4-Φ14	4-Φ18	4-Φ14	4-Φ23	4-Φ23	8-Φ23	8-Φ23	8-Φ25	8-Φ30	8-Φ34	8-Φ34	12-Φ34	12-Φ41
	H	150	165	185	200	235	260	285	320	340	400	450	500	980
Weight	kg	6	8	9	14	22	30	40	70	98	150	260	400	520
10.0MPa						UJ41H-100					UJ41H-100P/R			
DN (mm)		15	20	25	32	40	50	65	80	100	125	150	200	250
Main Dimensions (mm)	L	170	190	210	230	260	300	340	380	430	500	550	650	775
	D	105	125	135	150	165	195	220	230	265	310	350	430	500
	D1	75	90	100	110	125	145	170	180	210	250	290	360	430
	H	150	165	185	200	230	250	280	300	340	400	460	520	980
Weight	kg	6	8	10	16	26	34	48	96	130	250	380	510	660
16.0MPa										UJ41H-160				
DN (mm)		15	20	25	32	40	50	65	80	100	125	150	200	250
Main Dimensions (mm)	L	165	190	216	229	241	292	330	356	432	508	559	660	787
	D	105	130	140	155	170	195	220	230	265	315	355	430	515
	D1	75	90	100	110	125	145	170	180	210	250	290	360	430
	H	180	200	220	270	280	290	320	350	380	460	540	1000	1100
Weight	kg	11	21	29	38	41	58	80	110	135	182	305	520	846

Multifunctional Check Valve

Overview

It is developed on the basis of absorbing micro-resistance slow-closing butterfly check valves, hydraulically-controlled check butterfly valves, and multifunctional water pump control valves.

It has the functions of electric gate valve, electric butterfly valve and check valve, and uses quick closing and slow closing actions to eliminate water hammer hazards and protect the safety of water pumps and pipe systems.

Applications

The valve is a new type of pump station controlling equipment with novel structure, advanced performance and reliable operation. It is widely used in water supply and drainage systems, sewage pump rooms, chemical industry and other industries such as electric power, environmental protection, metallurgy, petroleum, petrochemical, chemical, water conservancy, municipal administration, and food, fluid and other conveying systems.

Working Principle

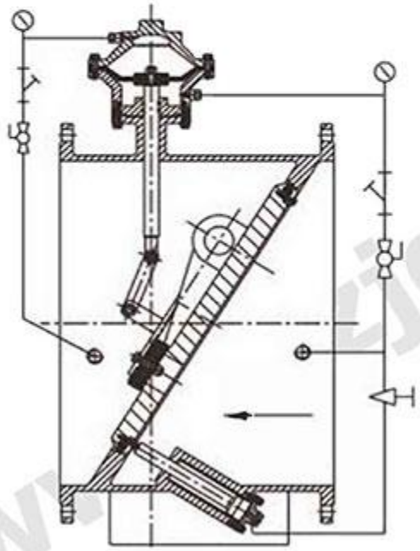

Diaphragm Type

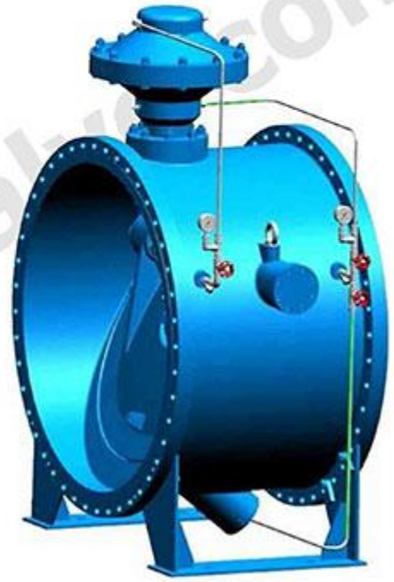

Open Valve

When the water pump is started, the water at the inlet end enters the diaphragm chamber or the lower part of the piston cylinder. Under the pressure of the water, the diaphragm or piston is pushed upward to drive the small valve disc to slowly open. The large valve disc opens simultaneously with the small valve disc under the push of hydraulic power to complete valve opening.

The valve opening speed can be adjusted according to the requirements of the working conditions, and the stop valve of the control pipe system can be adjusted to achieve the best condition.

Multifunctional Check Valve

Close Valve

When the pump is stopped, the flow rate in the valve decreases sharply, the medium at the inlet end of the valve loses pressure, and the large valve disc automatically closes because of its own gravity, cutting off 70 to 80% of the water flow.

At the same time, part of the return water enters the diaphragm cavity or the upper part of the piston cylinder. Pushing the diaphragm or piston downward drives the small valve disc to close slowly, and finally closes.

The valve closing time can be achieved by adjusting the stop valve of the control pipe system to control the water hammer peak within the specified range.

Features

Diverse Functions

Cut-off, check-back, and elimination of water hammer. One valve replaces multiple valves, saving the total investment in equipment.

Beautiful Appearance

A top-mounted control device, which has a small external space, simple internal structure, and strong operational reliability.

Easy Maintenance

The opening and closing of the valve is driven by the transported medium. It does not require personnel or external force to operate, which is very convenient.

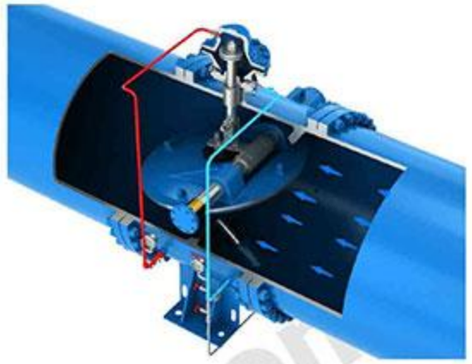

Reliable Sealing & Zero Leakage

Using soft sealing structure and metal hard sealing structure, the friction torque is small. The oblique eccentric structure sealing pair shortens the valve closing stroke, reduces the sliding distance, and reduces friction torque, achieving an instant separation. Therefore, it has the functions of sediment prevention and automatic pressure compensation.

Multifunctional Check Valve

Features

Slowly Open The Pump

During the pump starting, the valve inlet pressure reach a predetermined value before the valve opens, which can reduce the pump starting current and protect the motor and electronic control system.

When stopping the pump, it first closes quickly and then slowly closes, effectively eliminating water hammer and ensuring system safety.

Butterfly Structure

It adopts butterfly structure, which is small in size, light in weight and takes up little space. It reduces costs while increasing system reliability and stability and saving energy consumption.

Buffer Piston Damping Protection Device

When the nominal diameter is > DN300, the valve is equipped with a buffer piston damping protection device, which can effectively protect the valve sealing surface and the vibration and sound of closing the valve.

Technical Parameters

Valve Body Material						
Material	QT450-10	WCB	OCr18Ni9	00Cr18Ni10	OCr18N12Mo2	00Cr17Ni14Mo2
	ASTM A536 Gr 65-45-12	ASTM A216 WCB	ASTM A351 CF8	ASTM A351 CF3	ASTM A351 CF8M	ASTM A351 CF3M

Technical Parameters				
Size	Pressure (MPa)	Test pressure(MPa)		Working temperature(℃)
		Shell test	Sealing test	
DN50~2000 NPS8"～80"	0.6	0.9	0.66	-40℃～250℃
	1	1.5	1.1	
	1.6	2.4	1.76	
	2.5 - Class150	3.75	2.75	
Valve opening time (adjustable)		10～120 seconds		
Valve closing time (adjustable)		Quick closing 1～5 seconds; Slow closing 5～90 seconds		
Applicable media		Water, raw water, sewage, oil, etc.		

The Main Range of Applicable Standards		
Standard content	Standard	Standard name
Design and manufacturing standard	CJ/T 379	Multi-functional tilting disc valve
Flange standard	GB/T 17241.6	Integral cast iron flanges
	GB/T 9113	Integral steel pipe flanges
	HG/T 20592	Steel pipe flanges (PN designated)
	HG/T 20615	Steel pipe flanges (Class designated)
	HG/T 20623	Large diameter steel pipe flanges (Class designated)
Structure length standard	GB/T 12221	Metal valves - Face to face, end to end, center to face and center to end dimensions
	ISO 5752:1982	Metal valves for use in flanged pipe systems Face-to-face and center-to-face dimensions, MOD
Inspection and test standard	GB/T 13927	Industrial valves - Pressure testing
	ISO 5208:2015	Industrial valves Pressure testing of metallic valves, MOD
	API 598	Valve Inspection and Testing
Material standard	GB/T 12227	General purpose industrial valves Specification of spheroidal graphite iron castings
	GB/T 12229	General purpose industrial valves Specification of carbon steel castings
	GB/T 12230	General purpose industrial valves Specification of stainless steel castings

Multifunctional Check Valve

Main Parts Materials	
Part name	Material name or code
Valve body/valve plate	Ductile iron, carbon steel, stainless steel
Stem	Stainless steel, 20Cr3, 304, 316
Diaphragm seat/diaphragm cover/diaphragm pressure plate	Ductile iron, carbon steel, stainless steel
Piston cylinder/piston	Ductile iron, carbon steel, stainless steel
Control line	Stainless steel, copper alloy
Control ball valve or globe valve/filter	Stainless steel, copper alloy
Sealing surface material	Rubber, metal seal, metal composite seal

Installation Type Description

The tilting disc check valve can be installed vertically or horizontally. In order to facilitate installation and maintenance, horizontal installation should be given priority when space permits, and the valve shaft should be ensured to be horizontal.

When the valve is closed, the smooth surface of the valve plate is in the inlet direction, and the surface with the valve shaft and the control cylinder ejector rod is in the outlet direction. Reverse installation is strictly prohibited. The distance from adjacent valves and elbows shall not be less than IDN.

When installing horizontally, in order to improve the stress condition of the pipeline, when the valve diameter is larger than 900 mm, a bracket or foundation can be installed to improve the stress condition of the pipeline.

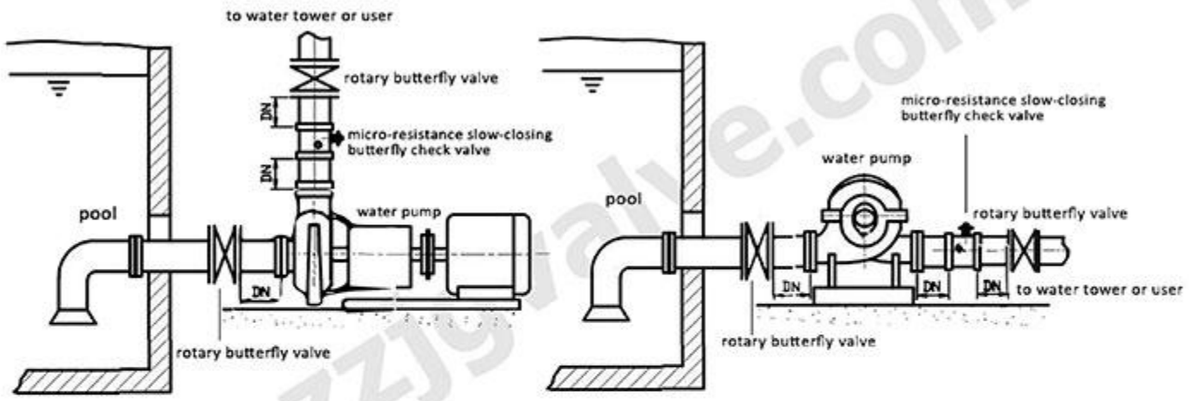

Schematic diagram of vertical and horizontal installation forms

Main External & Connecting Dimensions

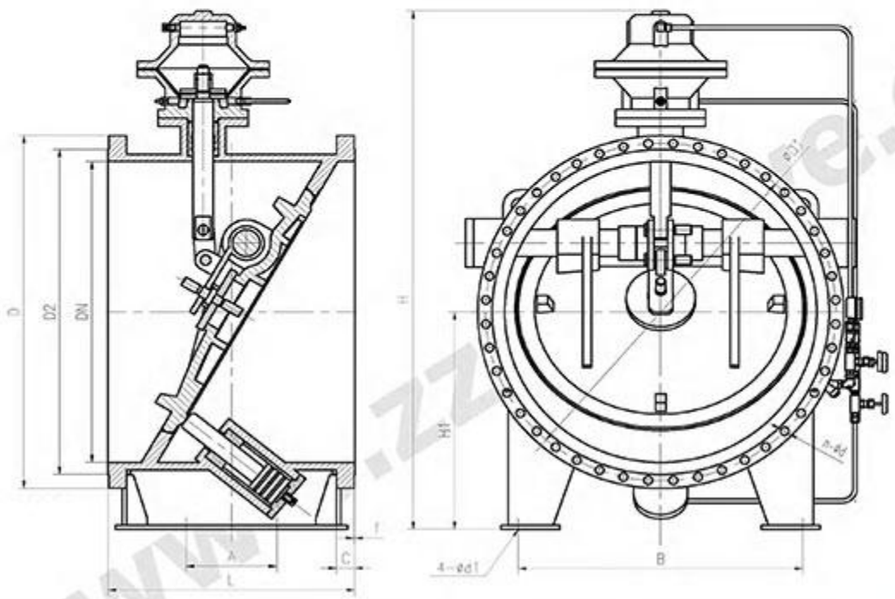

PN=0.6MPa												HG/T 20592-2009
DN	L	D	D1	D2	C	f	n-d	H	H1	A	B	d1
200	190	320	280	258	20	2	8-18	520	/	/	/	/
250	250	375	335	312	22	2	12-18	580	/	/	/	/
300	270	440	395	365	22	2	12-22	710	/	/	/	/
350	290	490	445	415	22	2	12-22	770	/	/	/	/
400	406	540	495	465	22	2	16-22	830	/	/	/	/
450	432	595	550	520	22	2	16-22	870	/	/	/	/
500	457	645	600	570	24	2	20-22	930	/	/	/	/
600	508	755	705	670	30	2	20-26	1090	/	/	/	/
700	610	860	810	775	24	2	24-26	1260	520	220	650	30
800	660	975	920	880	24	2	24-30	1440	630	220	720	33
900	711	1075	1020	980	26	2	24-30	1535	650	300	820	36
1000	811	1175	1120	1080	26	2	28-30	1750	710	350	900	36
1200	850	1405	1340	1295	28	2	32-33	1960	820	410	1070	36
1400	950	1630	1560	1510	32	2	36-36	2250	920	500	1250	36
1600	1100	1830	1760	1710	34	2	40-36	2500	1020	600	1300	36
1800	1200	2045	1970	1920	36	2	44-39	2820	1150	680	1400	36
2000	1300	2265	2180	2125	38	2	48-42	3150	1250	820	1550	48

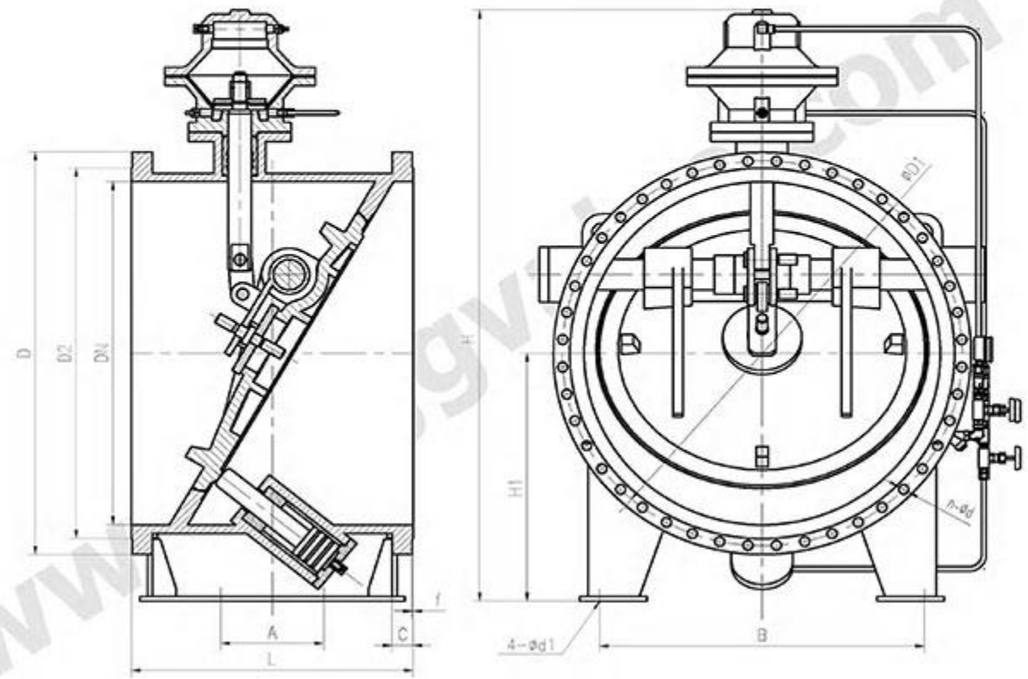

PN=1.0MPa												HG/T 20592-2009
DN	L	D	D1	D2	C	f	n-d	H	H1	A	B	d1
200	190	360	310	278	30	2	12-26	520	/	/	/	/
250	250	425	370	335	32	2	12-30	580	/	/	/	/
300	270	485	430	395	34	2	16-30	710	/	/	/	/
350	290	555	490	450	38	2	16-33	770	/	/	/	/
400	406	620	550	505	40	2	16-36	830	/	/	/	/
450	432	670	600	555	46	2	20-36	870	/	/	/	/
500	457	730	660	615	48	2	20-36	930	/	/	/	/
600	508	845	770	720	58	2	20-39	1090	/	/	/	/
700	610	960	875	820	50	2	24-42	1260	520	220	650	30
800	660	1085	990	930	54	2	24-48	1440	630	220	720	33
900	711	1185	1090	1030	58	2	28-48	1535	650	300	820	36
1000	811	1320	1210	1140	62	2	28-55	1750	710	350	900	36
1200	850	1530	1420	1350	70	2	32-55	1960	820	410	1070	36

Main External & Connecting Dimensions

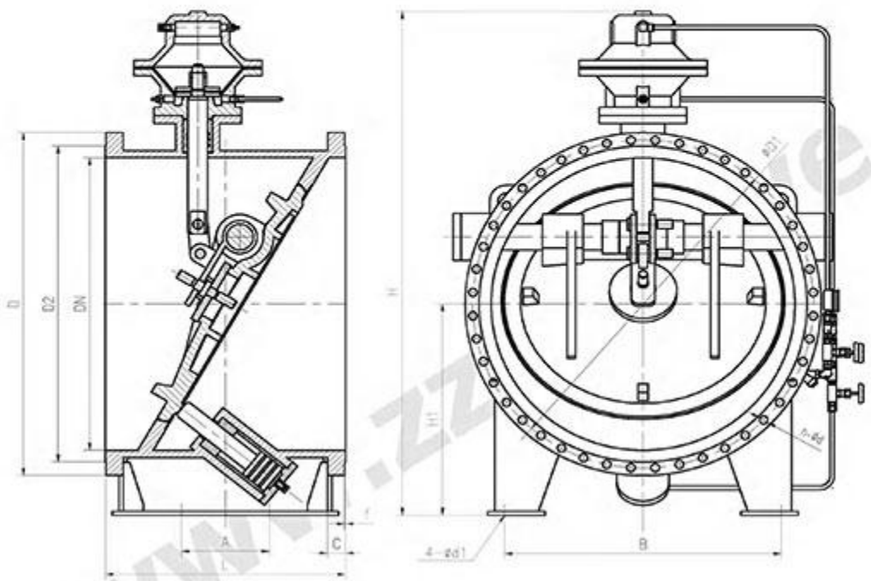

PN=1.6MPa												HG/T 20592-2009
DN	L	D	D1	D2	C	f	n-d	H	H1	A	B	d1
200	190	340	295	268	24	2	12-22	520	/	/	/	/
250	250	405	355	320	26	2	12-26	580	/	/	/	/
300	270	460	410	378	28	2	12-26	710	/	/	/	/
350	290	520	470	428	30	2	16-26	770	/	/	/	/
400	406	580	525	490	32	2	16-30	830	/	/	/	/
450	432	640	585	550	40	2	20-30	870	/	/	/	/
500	457	715	650	610	44	2	20-33	930	/	/	/	/
600	508	840	770	725	54	2	20-36	1090	/	/	/	/
700	610	910	840	795	42	2	24-36	1260	520	220	650	30
800	660	1025	950	900	42	2	24-39	1440	630	220	720	33
900	711	1125	1050	1000	44	2	28-39	1535	650	300	820	36
1000	811	1255	1170	1115	46	2	28-42	1750	710	350	900	36
1200	850	1485	1390	1330	52	2	32-48	1960	820	410	1070	36
1400	950	1685	1590	1530	58	2	36-48	2250	920	500	1250	36
1600	1100	1930	1820	1750	64	2	40-56	2500	1020	600	1300	36
1800	1200	2130	2020	1950	68	2	44-56	2820	1150	680	1400	36
2000	1300	2345	2230	2150	70	2	48-62	3150	1250	820	1550	48

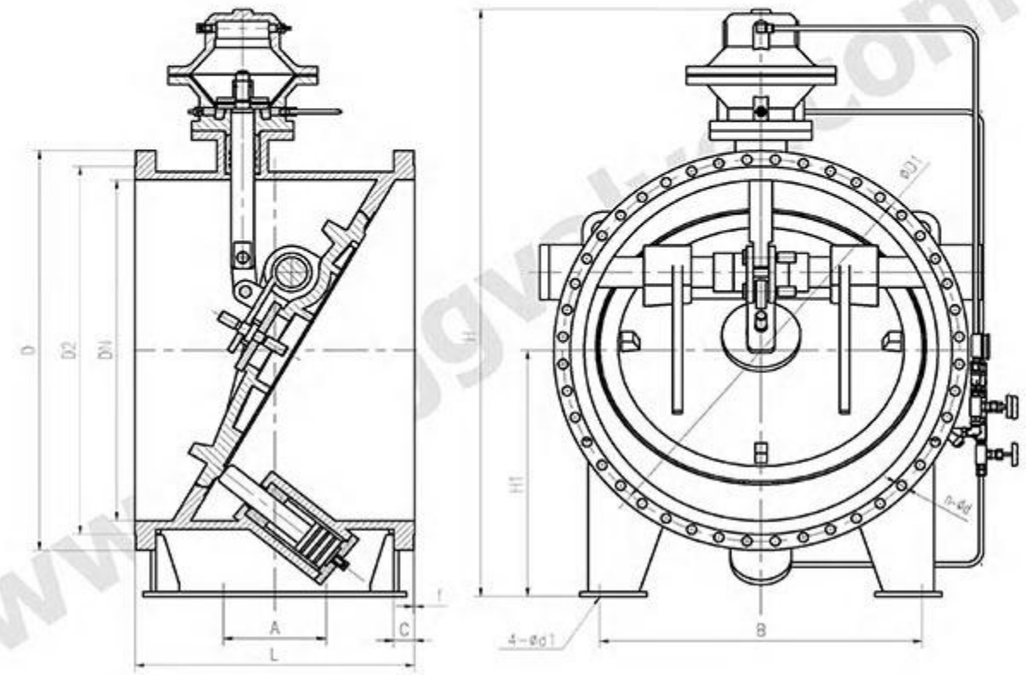

PN=2.5MPa												HG/T 20592-2009
DN	L	D	D1	D2	C	f	n-d	H	H1	A	B	d1
200	190	360	310	278	30	2	12-26	520	/	/	/	/
250	250	425	370	335	32	2	12-30	580	/	/	/	/
300	270	485	430	395	34	2	16-30	710	/	/	/	/
350	290	555	490	450	38	2	16-33	770	/	/	/	/
400	406	620	550	505	40	2	16-36	830	/	/	/	/
450	432	670	600	555	46	2	20-36	870	/	/	/	/
500	457	730	660	615	48	2	20-36	930	/	/	/	/
600	508	845	770	720	58	2	20-39	1090	/	/	/	/
700	610	960	875	820	50	2	24-42	1260	520	220	650	30
800	660	1085	990	930	54	2	24-48	1440	630	220	720	33
900	711	1185	1090	1030	58	2	28-48	1535	650	300	820	36
1000	811	1320	1210	1140	62	2	28-55	1750	710	350	900	36
1200	850	1530	1420	1350	70	2	32-55	1960	820	410	1070	36

Main External & Connecting Dimensions

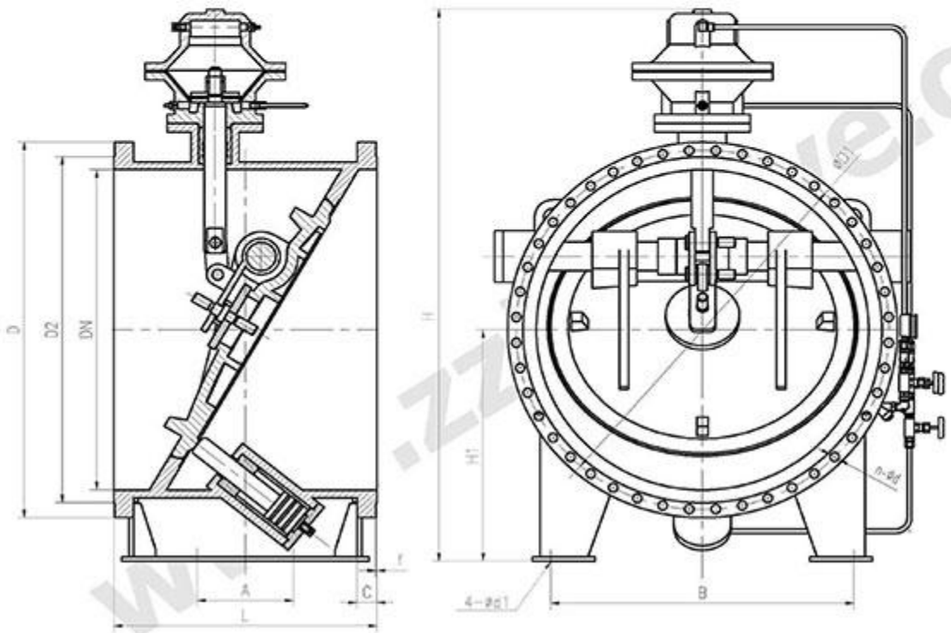

Class150							HG/T 20615-2009, HG/T 20623 2009					
DN	L	D	D1	D2	C	f	n-d	H	H1	A	B	d1
200	190	345	298.5	269.9	29	2	8-22	520	/	/	/	/
250	250	405	362	323.8	30.6	2	12-26	580	/	/	/	/
300	270	485	431.8	381	32.2	2	12-26	710	/	/	/	/
350	290	535	476.3	412.8	35.4	2	12-30	770	/	/	/	/
400	406	595	539.8	469.9	37	2	12-30	830	/	/	/	/
450	432	635	577.9	533.4	40.1	2	16-33	870	/	/	/	/
500	457	700	635	584.2	43.3	2	20-33	930	/	/	/	/
600	508	815	749.3	692.2	48.1	2	20-36	1090	/	/	/	/
700	610	835	795.3	762	45	2	40-22	1260	520	220	650	30
800	660	940	900.1	864	46.6	2	48-22	1440	630	220	720	33
900	711	1055	1010	972	52.9	2	44-26	1535	650	300	820	36
1000	811	1175	1121	1080	56.1	2	44-30	1750	710	350	900	36
1200	850	1390	1335	1289	65.6	2	44-33	1960	820	410	1070	36
1400	950	1600	1543	1492	73.6	2	60-33	2220	920	500	1250	36

Flow coefficient & flow resistance coefficient when the valve is fully open

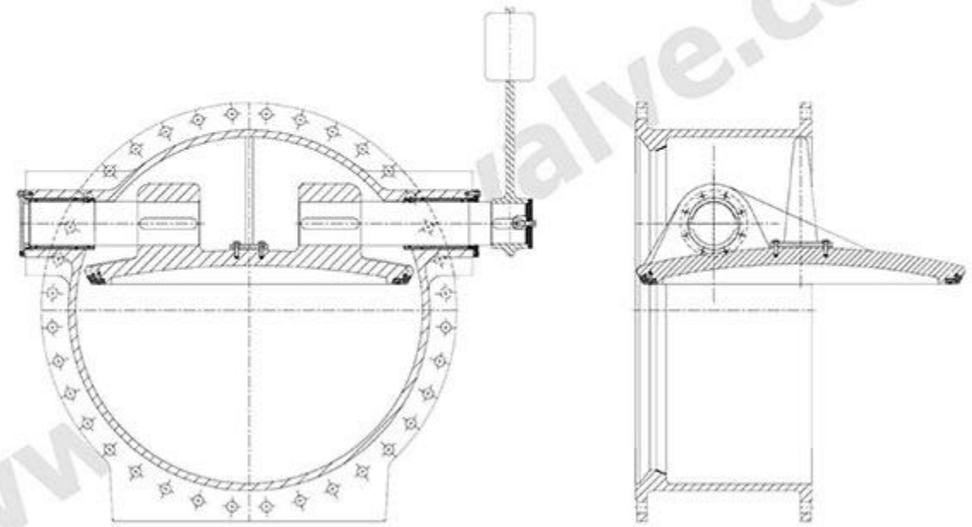

DN (mm)	Kv			K(ζ)		
	PN1.0MPa	PN1.6MPa	PN2.5MPa	PN1.0MPa	PN1.6MPa	PN2.5MPa
250	0.086			0.65		
300	0.13			0.59		
400	0.24			0.51		
500	0.39			0.5		
600	0.58			0.47		
700	0.83			0.43		
800	1.15			0.38		
900	1.5			0.36		
1000	1.9			0.34		
1200	2.83			0.3		
1400	3.97			0.29		
1600	5.37			0.28		
1800	7.19			0.25		
2000	9.1			0.24		

Lift Check Valve

Features

1.Lift check valves are divided into two types: vertical and horizontal.

2.One-way flow of medium in a pipeline and prevents back flow of medium.

3.Simple structure, reliable action and easy maintenance.

4.Application: Purification equipment, petroleum, chemical industry, metallurgy, electric power, textile and other production processes.

5.Range of working temperature: -29℃~550℃.

6.Connecting type: Flange, BW.

Main Parts

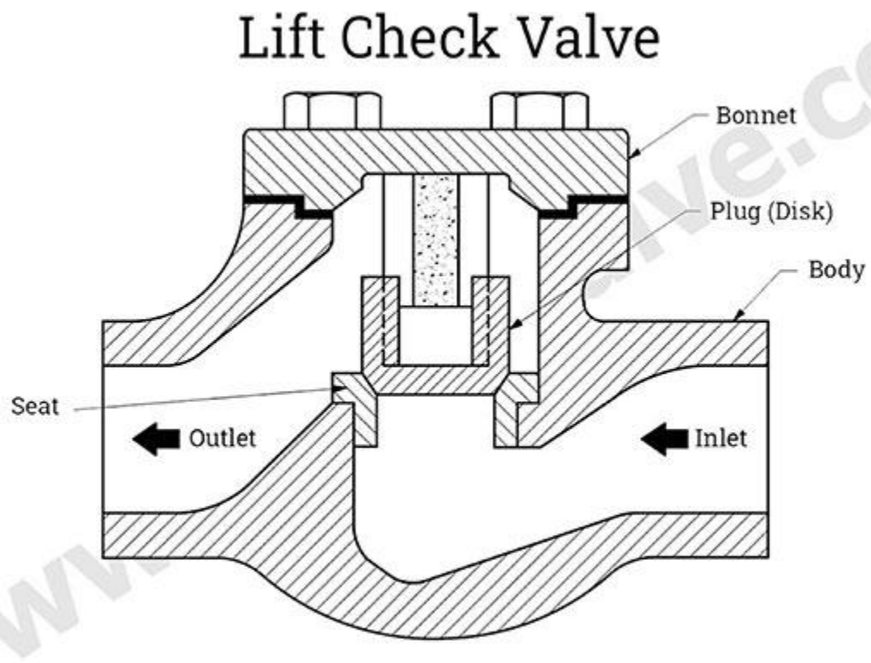

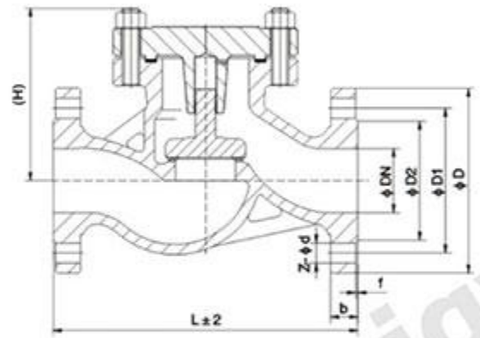

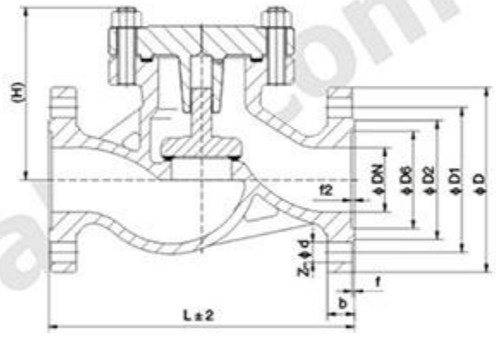

Lift Check Valve H41H/H41Y DN15~DN300 1/2"~12" Class150/Class300/Class600							
DN (mm)	Main Dimensions						
	L	D	D1	D2	b	Z-d	H
H41H-16C H41W-16C H41W-16P H41W-16R H41W-16I							
15	130	95	65	45	14	4-14	77
20	150	105	75	55	14	4-14	77
25	160	115	85	65	14	4-14	80
32	180	135	100	75	16	4-18	85
40	200	145	110	85	16	4-18	95
50	230	160	125	100	16	4-18	105
65	290	180	145	120	18	4-18	120
80	310	195	160	135	20	8-18	130
100	350	215	180	155	20	8-18	140
125	400	245	210	185	22	8-18	155
150	480	280	240	210	24	8-23	180
200	600	335	295	265	26	12-23	215
250	730	405	355	320	30	12-25	260
300	850	460	410	375	34	12-25	315
H41H-25 H41W-25 H41W-25P H41W-25R H41W-25I							
15	130	95	65	45	16	4-14	100
20	150	105	75	55	16	4-14	105
25	160	115	85	65	16	4-14	120
32	180	135	100	78	18	4-18	130
40	200	145	110	85	18	4-18	135
50	230	160	125	100	20	4-18	149
65	290	180	145	120	22	8-18	160
80	310	195	160	135	22	8-18	169
100	350	230	190	160	24	8-23	194
125	400	270	220	180	28	8-25	222
150	480	300	250	218	30	8-25	255
200	600	360	310	278	34	12-25	305
250	730	425	370	332	36	12-30	355
300	850	485	430	390	40	16-30	410

Swing Check Valve

Features

1.An automatic valve, prevent the leakage of container or the back flow of medium in pipelines, and to prevent the pump and its drive motor from reversing.

2.Be used on lines supplying auxiliary systems where the pressure may rise above the primary system pressure.

3.Swing check valves are divided into three types: single-disc type, double-disc type and multi-disc type.

4.Range of working temperature: -29℃~550℃.

5.Connecting type: Flange, BW.

6.Medium: Sewage, sea water, acid and alkali liquids, slurry, steam, oil, granular medium.

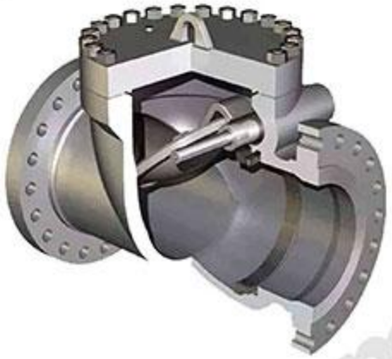

Main Parts

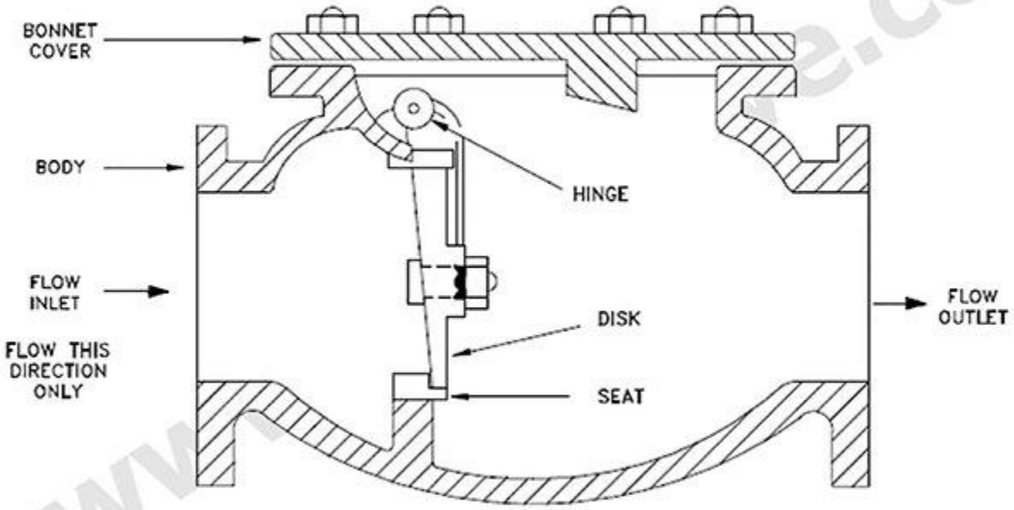

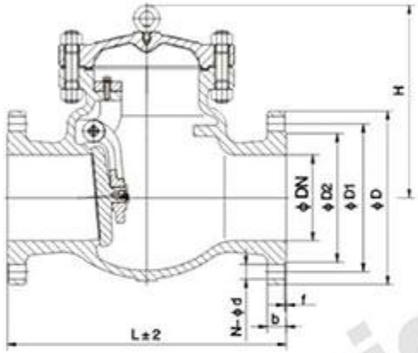

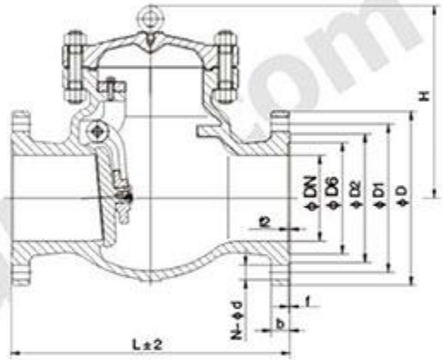

Swing Check Valve H44H/H44Y DN25~DN400 1"~16" Class150/Class300							
DN (mm)	Main Dimensions						
	L	D	D1	D2	b	Z-d	H
H44H-16C H44W-16C H44W-16P H44W-16R H44W-16I							
25	160	115	85	65	16	4-14	100
32	180	135	100	78	16	4-18	105
40	200	145	100	85	16	4-18	115
50	230	160	125	100	16	4-18	135
65	290	180	145	120	18	4-18	142
80	310	195	160	135	20	8-18	165
100	350	215	180	155	20	8-18	180
125	400	245	210	185	22	8-18	210
150	480	280	240	210	24	8-23	233
200	500	335	295	265	26	12-23	304
250	550	405	355	320	30	12-25	348
300	650	460	410	375	30	12-25	390
350	750	520	470	435	34	16-25	430
400	850	580	525	485	36	16-30	468
H44H-25 H44W-25 H44W-25P H44W-25R H44W-25I							
25	160	115	85	65	16	4-14	100
32	180	135	100	78	16	4-18	105
40	200	145	110	85	16	4-18	115
50	230	160	125	100	20	4-18	160
65	290	180	145	120	22	8-18	175
80	310	195	160	135	22	8-18	185
100	350	230	190	160	24	8-23	220
125	400	270	220	188	28	8-25	248
150	480	300	250	218	30	8-25	276
200	550	360	310	278	34	12-25	350
250	650	425	370	332	36	12-30	410
300	750	485	430	390	40	16-30	430
350	850	550	490	448	44	16-34	518
400	950	610	550	505	48	16-34	560

Wafer Check Valve

Features

1. Small size, light weight, compact structure and easy maintenance.
2. The valve plate adopts a dual type, which can quickly close automatically under the elastic force of the spring.
3. Due to the quick-closing effect, the medium can be prevented from flowing back.
4. Small structural length and good rigidity.
5. Safe and convenient, can be installed in both horizontal and vertical directions.
6. The valve disc can be single valve disc or double valve disc.
7. Applicable temperature: -196℃~550℃.
8. Applicable media: water, oil and gas, various corrosive medium.

Main Parts & Working principle

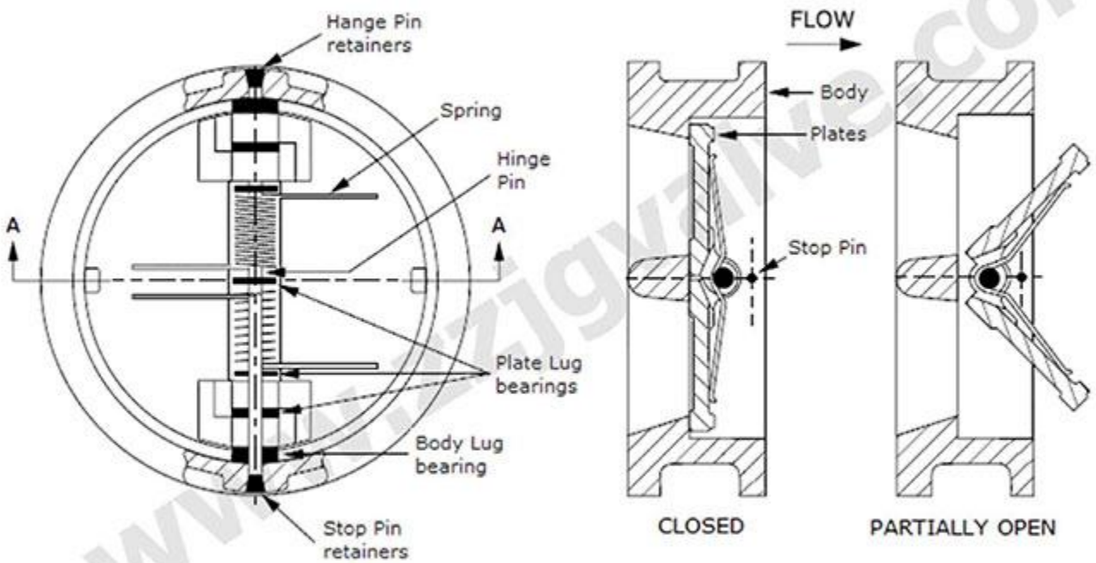

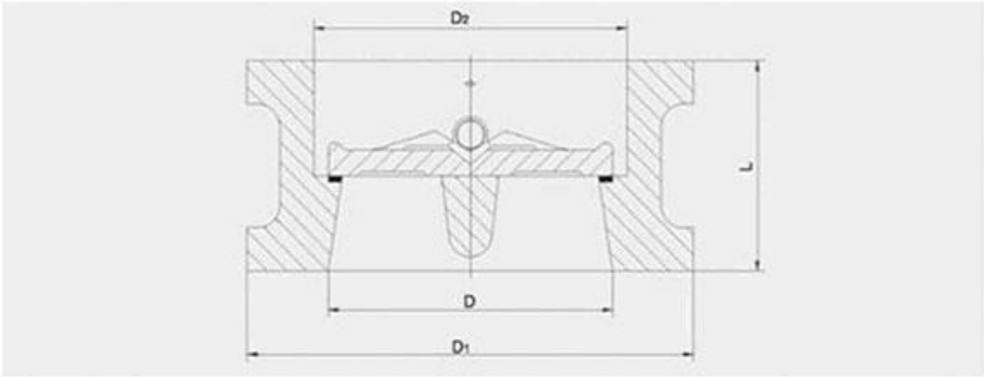

Wafer Check Valve H76H/H76W/H76X/H76F DN50~DN1200 2"~48" Class150/Class300								
Pressure	Size		Main Dimensions				Weight (kg)	Cv
	mm	In	L	D	D1	D2		
CLASS 150	50	2	60	51	103	56	2	48
	65	2-1/2	67	65	122	73	3	128
	80	3	73	80	135	88	4	150
	100	4	73	102	173	108	6	394
	125	5	86	127	195	132	8	830
	150	6	98	152	220	160	13	900
	200	8	127	203	277	210	25	1589
	250	10	146	254	337	266	39	3300
	300	12	181	305	407	310	54	3926
	350	14	184	350	448	355	80	5418
	400	16	191	400	512	405	117	8258
	450	18	203	450	547	455	138	10452
	500	20	219	500	604	505	163	14251
	600	24	222	600	715	605	331	26511
	700	28	305	700	773	700	380	33600
	750	30	305	746	824	750	425	48000
	800	32	305	796	878	800	560	55200
	900	36	368	898	983	910	640	84000
	1050	42	432	1050	1142	1055	960	96000
	1200	48	524	1200	1302	1205	1400	117600
CLASS 300	50	2	60	51	110	58	3	48
	65	2-1/2	67	65	128	73	4	128
	80	3	73	80	147	88	6	150
	100	4	73	102	179	108	8	394
	125	5	86	127	214	132	15	830
	150	6	98	152	249	160	18	900
	200	8	127	203	305	210	31	1589
	250	10	146	254	359	266	51	3300
	300	12	181	305	420	310	77	3926
	350	14	222	350	483	355	117	5418
	400	16	232	400	537	405	190	8256
	450	18	264	450	594	455	200	10452
	500	20	292	500	652	505	265	14251
	600	24	318	600	772	608	410	26511
	750	30	368	735	882	740	660	48000
	900	36	483	873	1044	880	1020	84000
	1050	42	568	1035	1196	1045	1540	96000
	1200	48	629	1179	1365	1190	2260	117600

Tiny Drag Slow Shut Check Valve

Features

1.Tiny Drag Slow Shut Check Valve can be used in clear water, sewage, seawater and other medium.

2.Prevent the backflow of the medium.

3.Effectively control the destructive water hammer to ensure the safe of the pipeline.

4.Valve structure is novel, small size, reliable sealing, smooth opening and closing, wear-resistant, long service life, oil pressure, slow closure is not affected by the medium, small flow resistance, wide range of applications and has a good energy-saving.

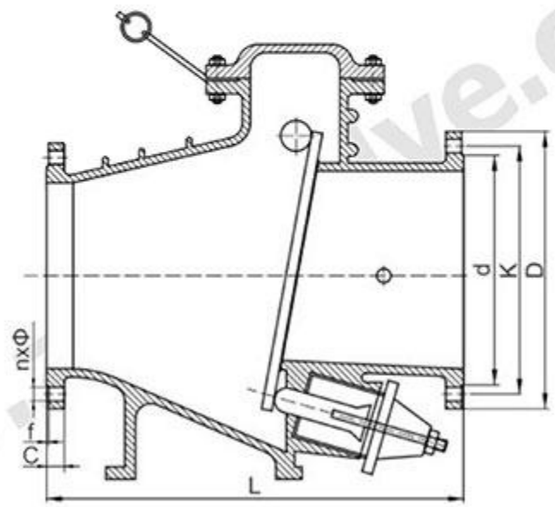

Main Performance Parameters	
Work pressure	PN10/PN16
Nominal pressure	DN50~DN900 NPS2"~36"
Medium temperature	-10~80℃
Applicable media	normal temperature water
Manufacturing Standards	GB/JIS/ANSI/BSEN/ISO/DIN
Pressure test	GB/T 13927-2008 Industrial valves - Pressure testing
	ISO 5208 :2015 Industrial valves--Pressure testing of metallic valves, MOD

Main Parts Material	
Body	ductile cast iron
Bonnet	ductile cast iron
Shaft	stainless steel
Valve clack	ductile cast iron+nitrile rubber
Valve plate	EPDM/NBR/NR
Slow closing device	stainless steel, copper alloy

HH44X Main Dimensions (mm)

DN	L	D		K		d		C		f	nxΦ	
		PN10	PN16	PN10	PN16	PN10	PN16	PN10	PN16		PN10	PN16
50	230	165	165	125	125	99	99	19	19	3	4×19	4×19
65	290	185	185	145	145	118	118	19	19	3	4×19	4×19
80	310	200	200	160	160	132	132	19	19	3	8×19	8×19
100	350	220	220	180	180	156	156	19	19	3	8×19	8×19
125	400	250	250	210	210	184	184	19	19	3	8×19	8×19
150	480	285	285	240	240	211	211	19	19	3	8×23	8×23
200	500	340	340	295	295	266	266	20	20	3	8×23	12×23
250	600	395	405	350	355	319	319	22	22	3	12×23	12×28
300	700	445	460	400	410	370	370	24.5	24.5	4	12×23	12×28
350	800	505	520	460	470	429	429	24.5	26.5	4	16×23	16×28
400	900	565	580	515	525	480	480	24.5	28	4	16×28	16×31
450	1000	615	640	565	585	530	548	25.5	30	4	20×28	20×31
500	1100	670	715	620	650	582	609	26.5	31.5	4	20×28	20×34
600	1300	780	840	725	770	682	720	30	36	5	20×31	20×37
700	1400	895	910	840	840	794	794	32.5	39.5	5	24×31	24×37
800	1500	1015	1025	950	950	901	901	35	43	5	24×34	24×40
900	1700	1115	1125	1050	1050	1001	1001	37.5	46.5	5	28×34	28×40

Rubber Flap Check Valve

Features

1.Composed of three main parts: valve body, valve cover and rubber flap.

2.The rubber flap is made of steel plate, steel rod and reinforced nylon cloth as the backing, and the outer layer is covered with rubber, and the life of the flap can be up to 1,000,000 times.

3.Full flow area design, with small head loss, not easy to accumulate debris, easy maintenance and other characteristics.

4.The valve is mainly used in water supply and drainage system, can be installed in the outlet to prevent back flow and water hammer damage to the pump.

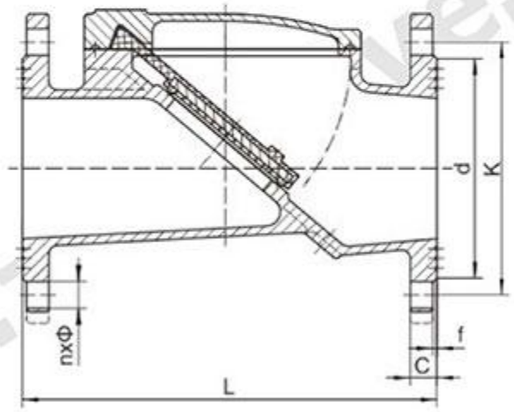

Main Performance Parameters	
Work pressure	PN10/PN16/PN25/150LB/10K/16K
Nominal pressure	DN50~DN600 NPS2"~24"
Medium temperature	0~80℃
Applicable media	normal temperature water
Manufacturing Standards	GB/JIS/ANSI/BSEN/ISO/DIN
Pressure test	GB/T 13927-2008 Industrial valves - Pressure testing
	ISO 5208 :2015 Industrial valves--Pressure testing of metallic valves, MOD

Main Parts Material	
Body	ductile cast iron, cast steel
Bonnet	ductile cast iron, cast steel
Valve clack	EPDM, NBR
Seal ring	EPDM, NBR
Fastener	carbon steel, stainless steel

H44X Main Dimenisons (mm)

DN	L	D		K		d		C		f	nxΦ	
		PN10	PN16	PN10	PN16	PN10	PN16	PN10	PN16		PN10	PN16
50	203	165	165	125	125	99	99	19	19	3	4×19	4×19
65	216	185	185	145	145	118	118	19	19	3	4×19	4×19
80	241	200	200	160	160	132	132	19	19	3	8×19	8×19
100	292	220	220	180	180	156	156	19	19	3	8×19	8×19
125	330	250	250	210	210	184	184	19	19	3	8×19	8×19
150	356	285	285	240	240	211	211	19	19	3	8×23	8×23
200	495	340	340	295	295	266	266	20	20	3	8×23	12×23
250	622	395	405	350	355	319	319	22	22	3	12×23	12×28
300	698	445	460	400	410	370	370	24.5	24.5	4	12×23	12×28
350	686	505	520	460	470	429	429	24.5	26.5	4	16×23	16×28
400	762	565	580	515	525	480	480	24.5	28	4	16×28	16×31
450	864	615	640	565	585	530	548	25.5	30	4	20×28	20×31
500	914	670	715	620	650	582	609	26.5	31.5	4	20×28	20×34
600	1064	780	840	725	770	682	720	30	36	5	20×31	20×37

Three-stage Slow-closing Check Butterfly Valve

Features

1. Simple structure, reliable check effect.
2. The slow-closing system is less affected by the medium in the pipeline, and the adjustment and maintenance are simple.
3. The valve closure is divided into three stages: fast shut-off, slow shut-off and slow closure, which can effectively prevent the impact of water hammer on the system.
4. Smooth opening and closing, eliminating noise.
5. The valve closure process, slow closing and slow closing time can be adjusted through the cylinder to control the best time.
6. Anti-mud and sand self-lubricating bearings.
7. The valve structure adopts three eccentric, inclined plate type, hard seal structure, featuring short friction stroke of sealing surface, rapid opening, reliable sealing and long service life.

Main Parts

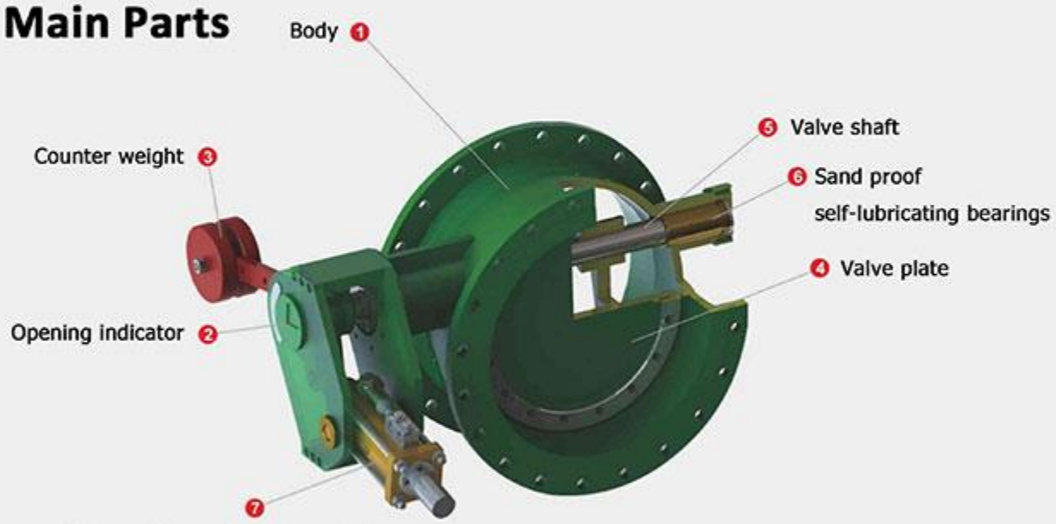

External three-stage slow closing cylinder

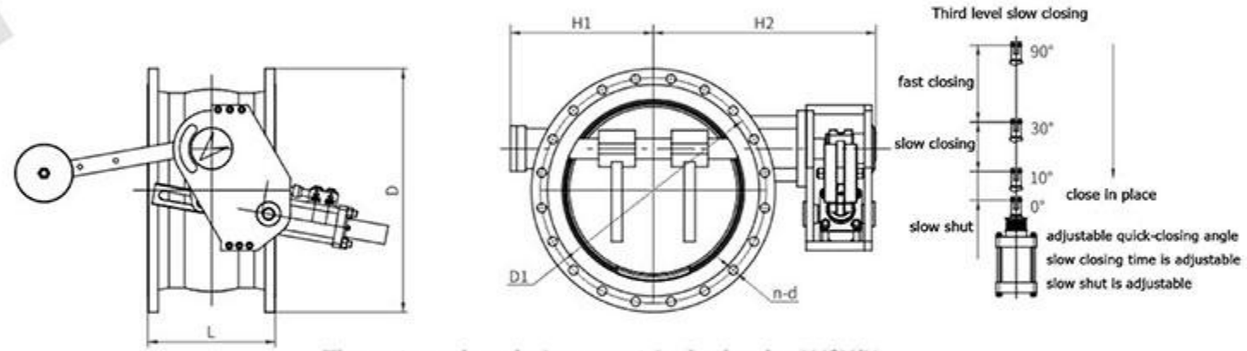

Three-stage slow-closing eccentric check valve H42X/H

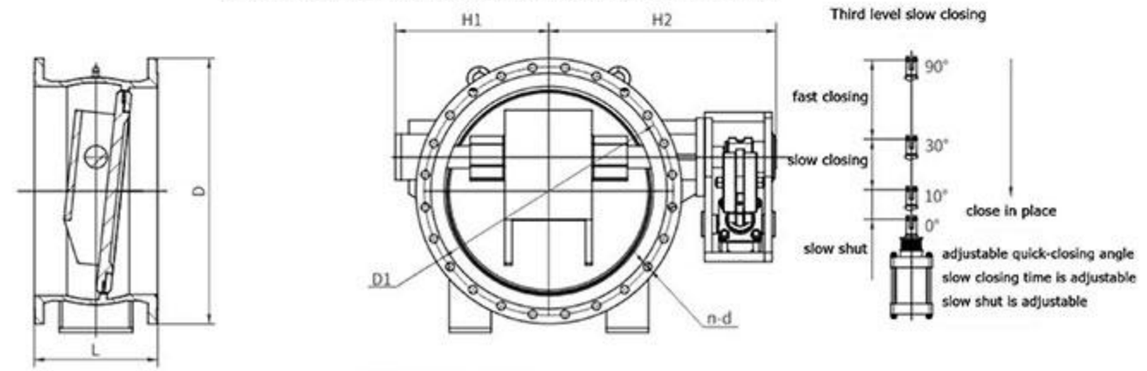

Three-stage slow closing inclined seat eccentric check valve H43X/H

H42X/H H43X/H Main Dimensions (mm)

DN	H1	H2	L	1.0MPa			1.6MPa			2.5MPa		
				D	D1	n-d	D	D1	n-d	D	D1	n-d
200	210	340	230	340	295	8-Φ23	340	295	12-Φ23	360	310	12-Φ28
250	245	375	250	395	350	12-Φ23	405	355	12-Φ28	425	370	12-Φ31
300	270	400	270	445	400	12-Φ23	460	410	12-Φ28	485	430	16-Φ31
350	300	430	290	505	460	16-Φ23	520	470	16-Φ28	555	490	16-Φ34
400	340	490	310	565	515	16-Φ28	580	525	1G-Φ31	620	550	16-Φ37
450	370	515	330	615	565	20-Φ28	640	585	20-Φ31	670	600	20-Φ37
500	405	570	350	670	620	20-Φ28	715	650	20-Φ34	730	660	20-Φ37
600	485	630	390	780	725	20-Φ31	840	770	20-Φ37	845	770	20-Φ40
700	570	750	430	895	840	24-Φ31	910	840	24-Φ37	960	875	24-Φ43
800	640	860	470	1015	950	24-Φ34	1025	950	24-Φ40	1035	990	24-Φ49
900	710	980	510	1115	1050	28-Φ34	1125	1050	28-Φ40	1185	1090	20-Φ49
1000	770	1050	550	1230	1160	28-Φ37	1255	1170	28-Φ43	1320	1210	28-Φ56
1200	920	1210	630	1455	1380	32-Φ40	1485	1390	32-Φ49	1530	1420	32-Φ56

Hydraulically Controlled Check Butterfly Valve With Count Weight

ZZJG VALVE

Features

1. The valve can be closed automatically by the potential energy of the hammer.
2. Reliable sealing and small flow resistance coefficient.
3. Adopting PLC intelligent control system, it can realize various humanized operation interfaces such as text and touch screen.
4. It can realize remote and local control.
5. It can realize linkage operation with other pipeline equipments according to the predetermined program.
6. It has fast and slow adjustable closing function.
7. With cut-off and check function.
8. It can realize the function of slow closure when shutting down, effectively eliminating the harm of water hammer and protecting the hydraulic turbine,pump and pipeline system.

Main parts & materials

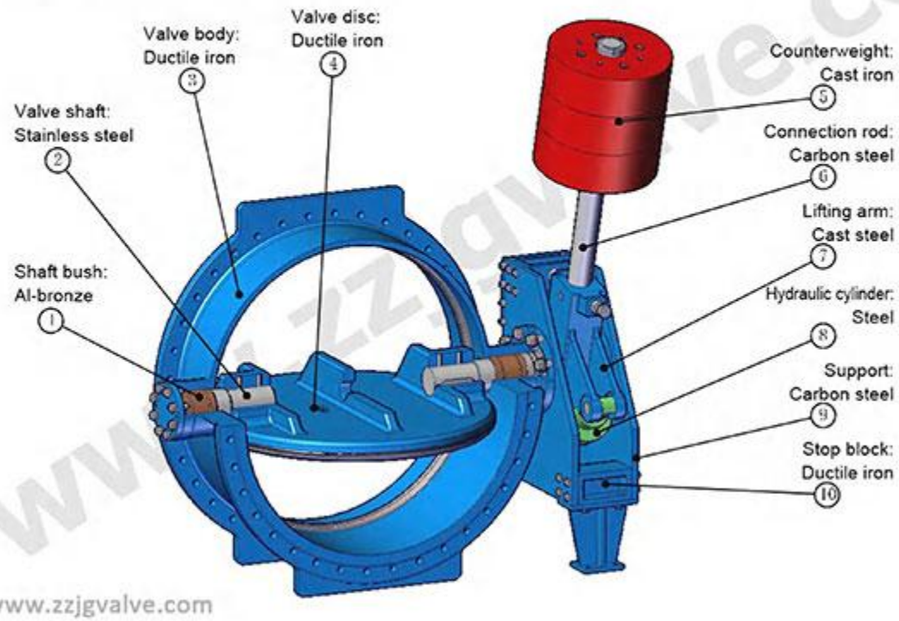

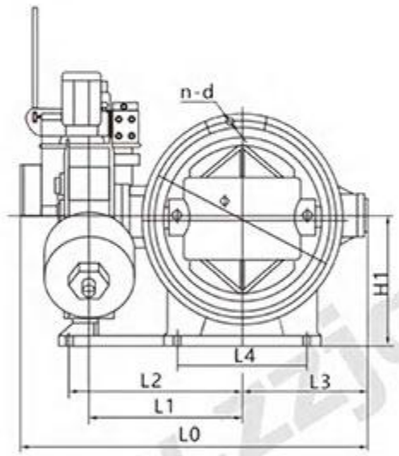

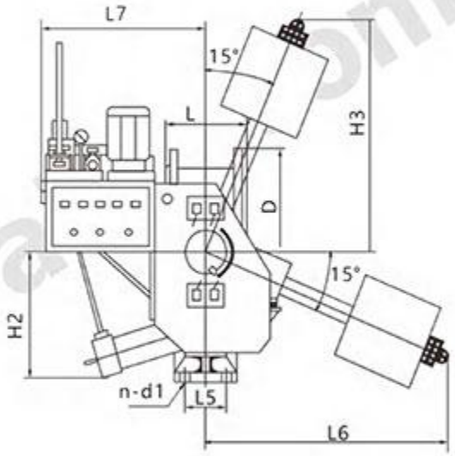

Dz7K42XH-2.5 6 10 Main Dimensions (mm)																			
DN mm	DN in	PN MPa	L	L0	L1	L2	L3	L4	L5	L6	L7	H1	H2	H3	D	Φ	n-d	n-d1	Quality Kg
400	16	1.0	216	1107	527	650	341	420	90	900	995	370	417	900	565	515	16-Φ28	6-Φ26	1155
		1.6	216	1107	527	650	341	420	90	900	995	370	417	900	580	525	16-Φ31	6-Φ26	1175
450	18	1.0	222	1143	552	680	352	420	90	900	995	400	417	900	615	565	20-Φ28	6-Φ26	1200
		1.6	222	1143	552	680	352	420	90	900	995	400	417	900	640	585	20-Φ31	6-Φ26	1280
500	20	1.0	229	1212	582	710	391	500	100	1100	995	430	417	1100	670	620	20-Φ28	6-Φ26	1310
		1.6	229	1212	582	710	391	500	100	1100	995	430	417	1100	715	650	20-Φ34	6-Φ26	1410
600	24	1.0	267	1335	651	780	439	540	110	1100	995	480	417	1100	780	725	20-Φ31	6-Φ30	1800
		1.6	267	1335	651	780	439	540	110	1100	995	480	417	1100	840	770	20-Φ37	6-Φ30	1920
700	28	1.0	292	1484	728	850	517	680	120	1100	995	530	417	1100	895	840	24-Φ31	6-Φ30	2240
		1.6	292	1484	728	850	517	680	120	1100	995	530	417	1100	910	840	24-Φ37	6-Φ30	2360
900	32	0.6	318	1681	799	940	585	760	145	1445	1080	600	455	1445	975	920	24-Φ31	6-Φ33	2540
		1.0	318	1681	799	940	585	760	145	1445	1080	600	455	1445	1015	950	24-Φ34	6-Φ33	2565
		1.6	318	1681	799	940	585	760	145	1445	1080	600	455	1445	1025	950	24-Φ40	6-Φ33	2700
800	36	1.0	330	1811	864	1000	650	800	150	1445	1080	660	455	1445	1115	1050	28-Φ34	6-Φ33	2780
		1.6	330	1811	864	1000	650	800	150	1445	1080	660	455	1445	1125	1050	28-Φ40	6-Φ33	2940
1000	40	0.6	410	1956	929	1060	730	900	180	1445	1080	690	455	1445	1175	1120	28-Φ31	6-Φ36	3560
		1.0	410	1956	929	1060	730	900	180	1445	1080	720	455	1445	1230	1160	28-Φ37	6-Φ36	3570
		1.6	410	1956	929	1060	730	900	180	1445	1080	720	455	1445	1255	1170	28-Φ43	6-Φ36	3770
1200	48	0.6	470	2254	1083	1250	860	1050	200	2010	1150	830	550	2010	1405	1340	32-Φ34	6-Φ39	4050
		1	470	2254	1083	1250	860	1050	200	2010	1150	850	550	2010	1455	1380	32-Φ40	6-Φ39	4265
1400	56	0.6	530	2554	1230	1390	998	1160	240	2010	1150	930	550	2010	1630	1560	36-Φ37	6-Φ42	4850
		1	530	2554	1230	1390	998	1160	240	2010	1150	950	550	2010	1675	1590	36-Φ43	6-Φ42	5130
1600	64	0.6	600	2924	1419	1600	1145	1450	300	2290	1360	1035	550	2290	1830	1760	40-Φ37	6-Φ48	6520
		1	600	2924	1419	1600	1145	1490	300	2290	1360	1080	550	2290	1915	1820	40-Φ49	6-Φ48	6760
1800	72	0.6	670	3147	1527	1710	1260	1600	350	2290	1360	1150	650	2290	2045	1970	44-Φ40	6-Φ48	9580
		1	670	3147	1527	1710	1260	1600	350	2290	1360	1180	650	2290	2115	2020	44-Φ49	6-Φ48	9760
2000	80	0.6	760	3454	1672	1880	1397	1780	380	2540	1580	1250	650	2540	2265	2180	48-Φ43	6-Φ48	10940
		1	760	3454	1672	1880	1397	1780	380	2540	1580	1280	650	2540	2325	2230	48-Φ49	6-Φ48	11215
2200	88	0.6	770	3681	1784	1990	1512	1860	400	2540	1580	1360	650	2540	2475	2390	52-Φ43	6-Φ48	12280
		1	770	3681	1784	1990	1512	1860	400	2540	1580	1400	650	2540	2550	2440	52-Φ57	6-Φ48	12600
2400	96	0.25	780	3955	1905	2110	1615	2040	420	2540	1580	1470	1000	2540	2605	2540	56-Φ34	6-Φ48	15100
		0.6	780	3955	1905	2110	1615	2040	420	2540	1580	1470	1000	2540	2685	2600	56-Φ43	6-Φ48	15360
2600	104	0.25	790	4340	2125	2330	1780	2100	450	2540	1580	1580	1000	2540	2805	2740	60-Φ34	6-Φ48	17490
		0.6	790	4340	2125	2330	1780	2100	450	2540	1580	1580	1000	2540	2905	2810	60-Φ49	6-Φ48	17780

Control Valve

Piston Type Mud Drain Valve

Diaphragm Type Mud Drain Valve

Composite Exhaust Valve

Diaphragm Multifunctional Water Pump Control Valve

Piston Flow Regulating Valve

Piston Type Mud Drain Valve

Overview

J744X/J644X hydraulic piston quick-opening mud drain valve is mainly used in various pools of water companies to remove sediment or dirt from the bottom of the pool. It can also be installed in industrial pipelines where the working medium is water, gas, pool, etc. for flow interception. J644X/J744X pneumatic and hydraulic angle quick-opening types are reasonably designed, easy to use, have good sealing performance and are durable.

The valve uses hydraulic cylinders and an angle shut-off valve with two parts, the hydraulic cylinder is a driving force to drive the valve plate lifting and lowering, opening the general only needs 3 seconds to clean up the pool of sand and dirt, clean up after the closure valve plate No leakage, easy maintenance, life expectancy of more than 2 years, feedback from users, the service life of right up to 5 years,

J744X/J644X Angle Drainage Valve must be equipped with a machine room, gas (water) pumps, reversing valves can be controlled from afar Drainage Valve switch, the general pool can be equipped with a row of 2-10 installation, while starting the switch, the driving fluid can be used in the water or gas, the product can save manpower and material resources, there is a big This product can save labor and material resources, and has great economic benefits is the ideal product.

Piston Type Mud Drain Valve

Quick-open mud valve by the hydraulic cylinder and angle shut-off valve combination, the hydraulic cylinder power belt or valve flap lift, so that the valve body channel open or closed to achieve the fluid on and off. Hydraulic cylinder piston seals for the L-type leather bowl, its sealing performance is good, durable. The valve flap and valve seat are soft sealing, with good sealing performance and no leakage. Adopt electric two-position four-way directional valve or manual two-position four-way directional valve centralized control, convenient operation. Quick-opening mud valve is installed at the bottom of all kinds of sedimentation tanks outside the wall, to exclude the sediment and dirt at the bottom of the tank.

The main technical parameters	
Nominal pressure (MPa)	0.6MPa, 1.0MPa
Minimum driving pressure	0.15MPg
Applicable medium	water, sewage
Applicable temperature	0~80℃
Flange standard	GB/T 17241.8 Synoptic table for cast iron pipe flanges
	JB/T 79.1 Raised integral cast steel pipe flange
Pressure test standard	GB/T13927 Industrial valves - Pressure testing

Installation diagram

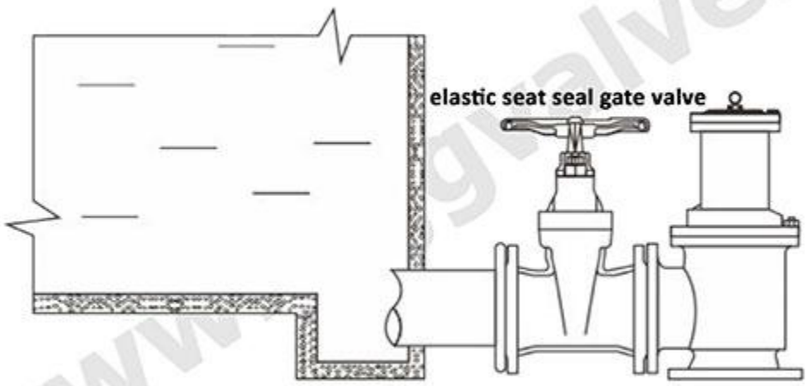

J744X/J644X
hydraulic and pneumatic angle type quick opening mud drain valve

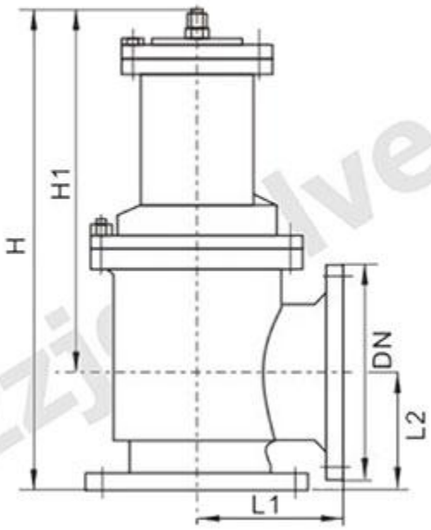

P747X Main Dimensions (mm)			
DN	L	L1	H
80	480	135	125
100	500	145	125
150	620	175	145
200	735	225	185
250	805	260	205
300	940	280	245
350	1100	305	270
400	1200	340	310

Main component materials				
Parts	Body Bonnet	Diaphragm pressure plate Valve plate	Stem	Diaphragm
Material	Cast iron, ductile iron, carbon steel	Ductile iron, bronze	Stainless steel	Nylon reinforced rubber

Diaphragm Type Mud Drain Valve

Overview

It is suitable for water treatment plant, used for discharging sludge and wastewater in pool. This valve is an angular structure, the partition plate divides the inner cavity into two parts: the control cavity and the flow path, and the control cavity is divided into the upper and lower control cavities by the diaphragm. The valve seat is a flat-bottomed structure with ceramic sprayed on the sealing surface, which is extremely resistant to abrasion and corrosion, and prevents sludge from accumulating garbage for long-term use.

Main specifications	
Pressure Level	PN6
highest working pressure	0.6MPa
Valve seat test pressure	0.66MPa
Valve body test pressure	0.9MPa
Flange pressure rating	PN10 or customer specified

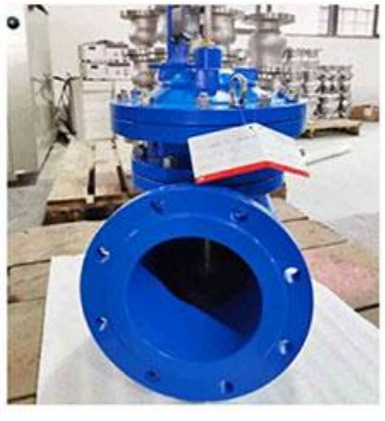

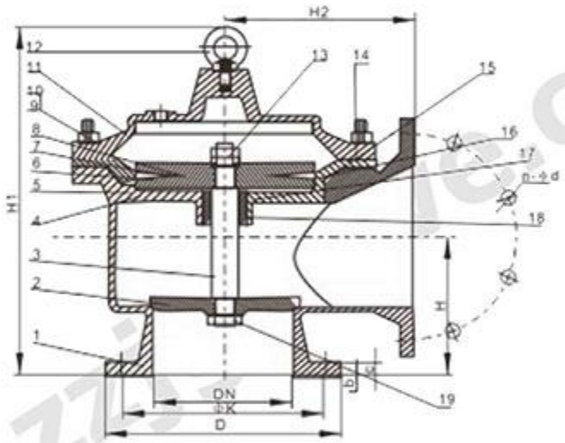

No.	Part	Material
1	Body	QT450-10
2	Valve	QT450-10+rubber
3	Shaft	2Cr13
4	Separator	QT450-10
5	O-ring	NBR
6	Lower diaphragm pressure plate	Q235
7	Diaphragm	NBR+cord fabric
8	Upper diaphragm pressure plate	Q235
9	Stud	Class 8.8
10	Nut	Class 8
11	Bonnet	QT450-10
12	Lifting bolt	20#
13	Nut	A2-70
14	Bolt	A2-70
15	O-ring	NBR
16	Shaft sleeve	ZCuAl10Fe3
17	O-ring	NBR
18	Seal ring	NBR
19	Thin nut	A2-70

PM747X Main Dimensions (mm)

DN	D	ΦK	C	F	N	Φd	ΦF	H1	H2	H
DN150	285	240	19	3	8	23	340	410	225	143
DN200	340	295	20	3	8	23	435	501	275	200
DN250	395	350	22	3	12	23	536	610	325	238
DN300	445	400	24.5	4	12	23	640	705	375	285

Composite Exhaust Valve

Overview

This series of composite exhaust valves are suitable for installation in the pump outlet or water distribution pipeline. Used to exclude a large amount of air collected in the pipeline, or in the pipeline at the higher end of the collection of a small amount of air discharged into the atmosphere, in order to improve the efficiency of the pipeline and pumping machine, and in the pipe once the negative pressure is generated, the valve quickly inhaled the outside world air, in order to protect the pipeline due to the damage caused by the negative pressure phenomenon.

Working principle

When the pipe starts to be filled with water, the plug stays in the open position and a large amount of exhaust is carried out. When the air is exhausted, water accumulates in the valve, the float is floated, the piston moves to the closed position, and a large amount of exhaust is stopped. When the water in the pipe is transported normally If a small amount of air accumulates in the valve to a considerable extent, the water level in the valve will drop, and the float will drop accordingly. At this time, the air will be discharged from the small hole, or from the small hole of the automatic exhaust valve. When the water pump stops and the water in the pipe is empty or negative pressure occurs in the pipe, the piston opens quickly to suck in air to ensure the safety of the pipeline.

Technical Parameters	
Air closing pressure MPa	≥0.07
Water shut-off pressure MPa	0.02～PN（working pressure）
Valve body test pressure MPa	1.5/2.4/3.75
Seal test pressure MPa	1.1/1.76/2.75
Pressure test standards	GB/T 13927-92 Pressure testing for general purpose valves

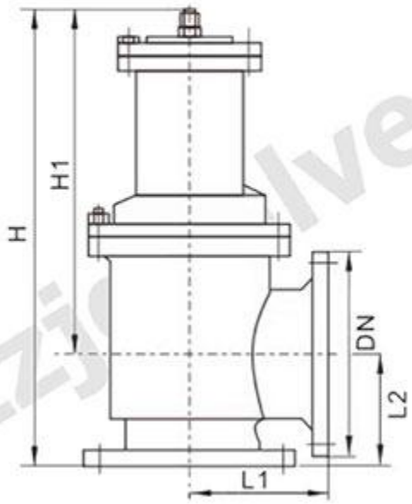

P747X Main Dimensions (mm)			
DN	L	L1	H
80	480	135	125
100	500	145	125
150	620	175	145
200	735	225	185
250	805	260	205
300	940	280	245
350	1100	305	270
400	1200	340	310

Main component materials				
Parts	Body Bonnet	Diaphragm pressure plate Valve plate	Stem	Diaphragm
Material	Cast iron, ductile iron, carbon steel	Ductile iron, bronze	Stainless steel	Nylon reinforced rubber

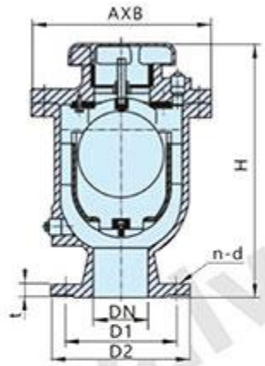

CARX Main Dimensions (mm)								
DN(mm)	Code name	PN(MPa)	D1	D2	t	n-d	H	AxB
25	CARX-0025	1.0	ZG1"	/	/	/	-260	145x145
		1.6	ZG1"	/	/	/		
50	CARX-0050	1.0	125	165	19	4-Φ19	-320	162x162
		1.6	125	165	19	4-Φ19		
80	CARX-0080	1.0	160	200	19	8-Φ19	-365	198x198
		1.6	160	200	19	8-Φ19		

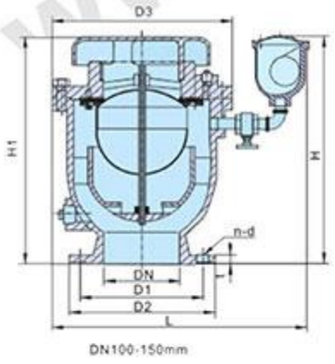

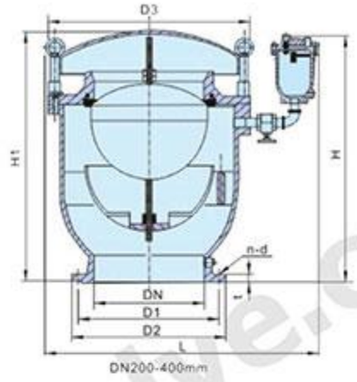

CARX Main Dimensions (mm)										
DN(mm)	Code name	PN(MPa)	D1	D2	t	n-d	H	H1	L	D3
100	CAR X-0100	1	180	220	19	8-Φ19	-412.7	-398	-425	Φ280
		1.6	180	220	19	8-Φ19				
150	CAR X-0150	1	240	285	19	8-Φ23	-446.5	-444.5	-505	Φ356
		1.6	240	285	19	8-Φ23				
200	CAR X-0200	1	295	340	20	8-Φ23	-563	-546	-581	Φ446
		1.6	295	340	20	12-Φ23				
250	CAR X-0250	1	350	395	22	12-Φ23	-755	-685	-800	Φ500
		1.6	355	405	22	12-Φ28				
300	CAR X-0300	1	400	445	24.5	12-Φ23	-870	-790	-905	Φ605
		1.6	410	460	24.5	12-Φ28				
400	CAR X-0400	1	515	565	24.5	16-Φ28	-893	-935	-991	Φ740
		1.6	525	580	28	16-Φ31				

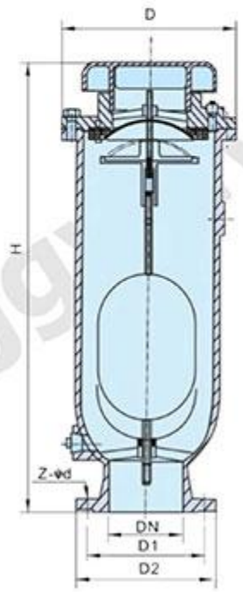

SCAR Main Dimensions (mm)						
DN(mm)	Code name	D	D1	D2	H	Z-Φd
50	SCAR-0050	162×162	125	165	528	4-Φ19
80	SCAR-0080	198×198	160	200	613	8-Φ19
100	SCAR-0100	280	180	220	398	8-Φ19
150	SCAR-0150	356	240	285	870	8-Φ23
200	SCAR-0200	446	295	340	1095	8-Φ23

Diaphragm Multifunctional Water Pump Control Valve

Overview

JD745X diaphragm type multi-function water pump control valve is installed in the water supply system of high-rise buildings and other water supply systems at the outlet of the pump to prevent backflow of media, water hammer and water hammer phenomenon of intelligent valves. The valve both electric valve, check valve and water hammer eliminator three functions, can effectively improve the safety and reliability of the water supply system.

And will be slow to open, fast closed, slow closed to eliminate the technical principle of water hammer integration, to prevent the pump water hammer and stop the pump water hammer generation. Only need to operate the pump motor opening and closing button, the valve can be in accordance with the pump operating procedures to automatically realize the opening and closing, large flow, small pressure loss, diaphragm type is suitable for valves up to 600 caliber.

Installation diagram

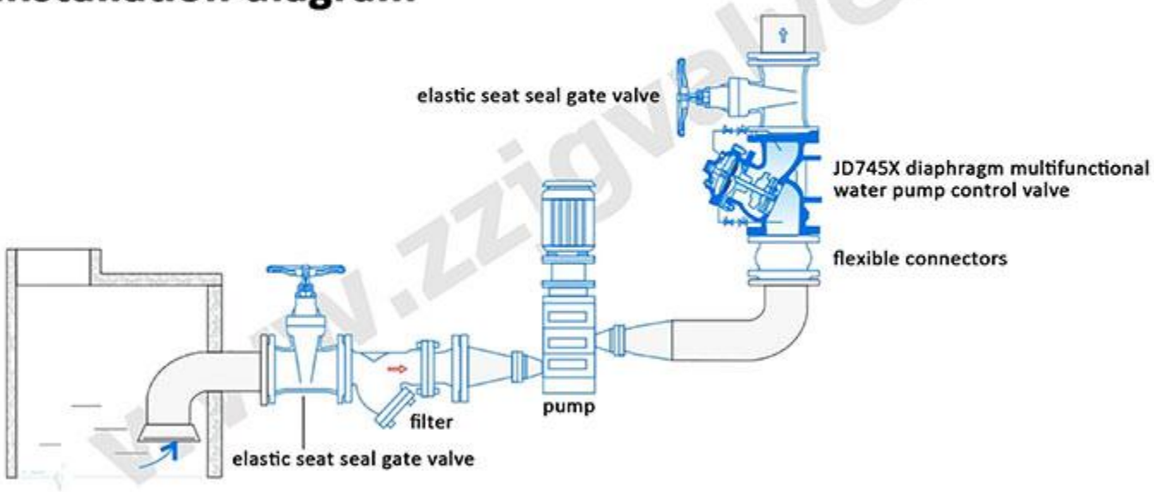

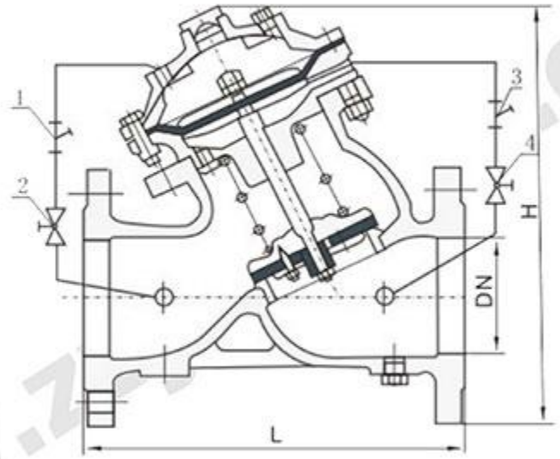

1/3 filter 2/4 small ball valve

JD745X Main Dimensions (mm)																			
DN	50	65	80	100	125	150	200	250	300	350	400	450	500	600	700	800	900	1000	1200
L	203	216	241	292	330	356	457	533	610	686	762	864	914	1067	1300	1450	1650	1800	2000
H	293	328	364	418	481	543	673	729	927	957	1188	1218	1256	1600	1800	1870	1980	2300	2600

Piston Flow Regulating Valve

Features

1. Linear adjustment: The valve opening and flow rate are linear, which can achieve precise adjustment.

2. Low maintenance cost: Reasonable flow path and appropriate material selection ensure the long service life of the valve.

3. Small driving force: Hydraulic balance design and copper alloy overlay on the guide bar ensure that the piston runs more smoothly and reliably.

4. Installation is optional: the valve can be installed vertically, horizontally, suspended, or on any side of the pipeline.

5. Reliable sealing (ordinary type): The metal valve seat connected with high-performance elastic silicone provides a bubble-level sealing effect, effectively preventing the valve seat from being scratched and extending the service life of the valve seat.

7. Tapered hole design, anti-cavitation (multi-nozzle hole type): Special tapered hole design accelerates the water flow through the sleeve, causing cavitation to occur in the center of the valve, effectively preventing cavitation from causing damage to the valve under high pressure difference. Damage to components.

8. It can be used for multiple purposes and can replace the functions of hydraulic diaphragm control valve and Y-type control valve.

Main parts					
No.	Part	No.	Part	No.	Part
1	fluid cover bolts	10	piston sleeve with latch nut	19	V-type oil seal sleeve
2	fluid cover	11	piston sleeve	20	stem
3	drive rod base	12	seal ring	21	bearing liner
4	actuating arm	13	seal ring pressure plate	22	gear box
5	lifting ring	14	seal ring clamp bolt	23	O-ring
6	body	15	seat	24	tetragonal bond
7	piston sleeve seal ring	16	short tube fixing bolts, nuts and washers	25	drive rod base latch
8	piston sleeve seal ring	17	water outlet short pipe	26	gearbox retaining bolt
9	piston sleeve base	18	handwheel	27	piston sleeve with pin

Application occasions

Sz Type Slotted Cylinder

More suitable as a control valve, which can be continuously adjusted under obvious pressure difference conditions, can prevent cavitation, and can be used in water media containing suspended substances.

Lh Type Multi-port Cylinder

Most suitable as a control valve, it can be continuously adjusted well under obvious pressure difference conditions and has the ability to prevent cavitation.

E Type With Segmented Edge

Most suitable as a control valve, with sufficient reverse pressure, and it can be used as a pump starting valve.

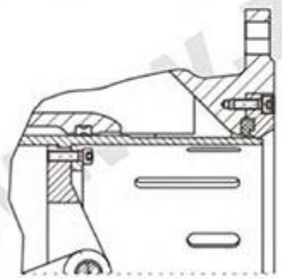

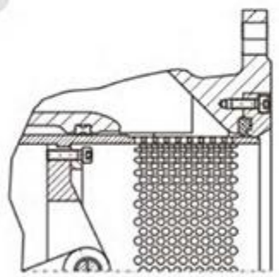

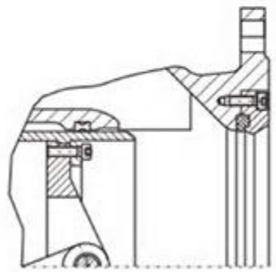

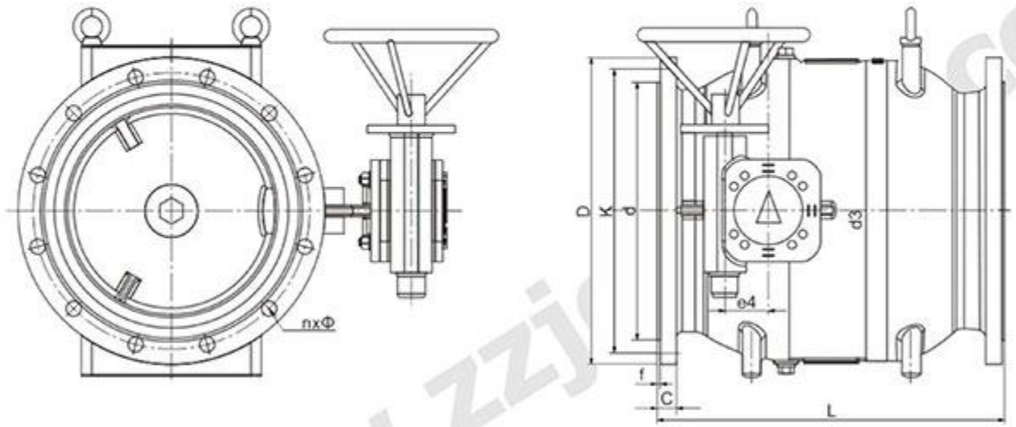

Main Dimensions (mm)												
DN	L	D		K		d		c		f	nxΦ	
		PN10	PN16	PN10	PN16	PN10	PN16	PN10	PN16		PN10	PN16
200	400	340	340	295	295	266	266	20	20	3	8×23	12×23
250	450	395	405	350	355	319	319	22	22	3	12×23	12×28
300	500	445	460	400	410	370	370	24.5	24.5	4	12×23	12×28
400	600	565	580	515	525	480	480	24.5	28	4	16×28	16X31
450	650	615	640	565	585	530	548	25.5	30	4	20×28	20×31
500	750	670	715	620	650	582	609	26.5	31.5	4	20×28	20X34
600	900	780	840	725	770	682	720	30	36	5	20×31	20×37
700	1050	895	910	840	840	794	794	32.5	39.5	5	24×31	24×37
800	1200	1015	1025	950	950	901	901	35	43	5	24×34	24×40
900	1350	1115	1125	1050	1050	1001	1001	37.5	46.5	5	28×34	28×40
1000	1500	1230	1255	1160	1170	1112	1112	40	50	5	28×37	28×43
1200	1800	1455	1485	1380	1390	1328	1328	45	57	5	32×40	32×49
1600	2500	1915	1930	1820	1820	1750	1750	49	65	5	40×49	40×56

ZZJG VALVE MORE VALUE

ZHENGZHOU JINGGONG TECHNOLOGY CO., LTD.

Tel: +86-371-55659925

Fax: +86-371-55659926

Email: info@zzjgvalve.com

Web: www.zzjgvalve.com

Address: Chuangye Road, Gaoshan Town, Zhengzhou City, China 450000