ZZJG VALVE

TOTAL SOLUTIONS FOR FLOW SYSTEM

Metal Seal Butterfly Valve (Quadruple Offset)

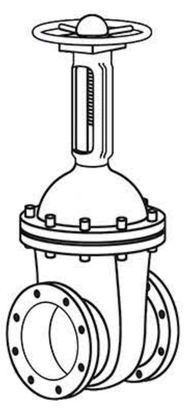
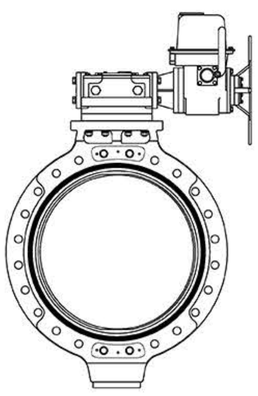
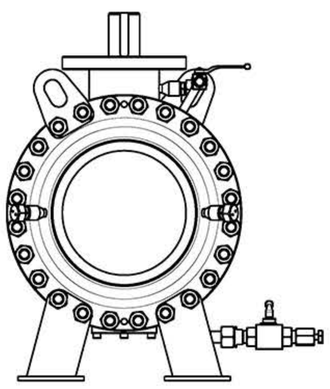
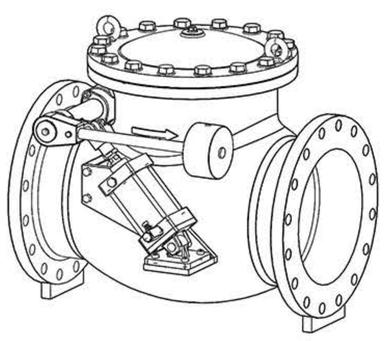
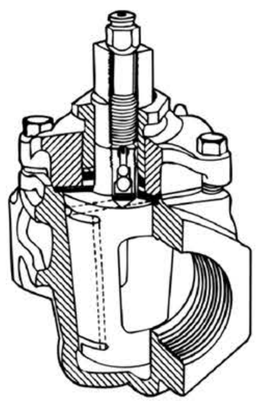
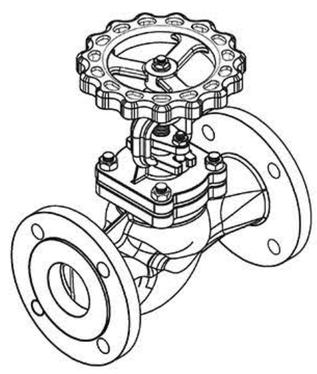

ABOUT US

ZZJG VALVE

ZHENGZHOU JINGGONG TECHNOLOGY CO., LTD is located in "Hometown of Valve in China" Gaoshan Town, Xingyang City, Henan Province. It is a high-tech enterprise in one line of design, manufacturing, sales and services.

Founded in 1981, after more than 40 years of development, it has become a professional valve manufacturer. With 103,180,000 RMB of registered capital, it covers an area of 26,000 ㎡ and owns professional workshops.

Aim: loyal to and customer, optimal management, rigorous and pragmatic and to promote China's valve industry to a higher level and ZZJG brand a leading position.

Certifications: ISO9001 Quality System Certification, ISO14001 Environment System Certification, ISO45001 Occupational Health and Safety Management Certification, TS Special Equipment License, API 609, API 6D, European Union CE Certification, EAC, SGS Certification, WRAS Certification, Utility Model Patent Certificates, etc.

Main products: PN0.25-32MPa, DN50-3000, soft/metal seal butterfly valves, plug valves, ball valves, gate valves, globe valves, check valves, control valves, etc.

Application: Water engineering, Electric power, Petroleum, Chemical industry, Petrochemical industry, Heating, Pharmaceuticals, Metallurgy, etc.

www.zzjgvalve.com

ZZJG CASES

The company strictly controls and checks the quality of every link and process. Product design has been incorporated into a set of extremely rigorous and precise procedures; from design, material selection, manufacturing, assembly to operation, every link must undergo rigorous testing procedures, strict control, and high quality, so that customers can use it. At the same time, we deeply feel our rigorous and pragmatic quality purpose.

Metal Seal Butterfly Valve (Quadruple Offset)

Overview

It is a high-performance valve developed by our company to solve the problem that the three offset butterfly valve cannot achieve two-way zero leakage.

The sealing structure has been fundamentally changed, and the sealing effect is mainly achieved by relying on the sealing specific pressure generated by the torsional extrusion of the sealing auxiliary hair.

When the medium flows forward and reverse, the sealing pair acts under the dual action of torsional sealing pressure and part of the medium pressure, so that the valve can achieve two-way zero leakage, high temperature and high pressure resistance, and wear resistance, thereby extending the service life of the valve.

Applications

ZZJG VALVE

Sealing test 1.1*PN Shell test 1.5*PN

Technical Performance Specifications

Nominal diameter (mm)	Nominal pressure (MPa)	Test pressure (MPa)		Applicable temperature	Applicable medium
		Shell test	Sealing test		
50~3000	0.6	0.9	0.66	0~80°C 0~200°C 0~400 °C	clean water sewage oil etc.
	1.0	1.5	1.1		
	1.6	2.4	1.76		
	2.5	3.75	2.76		
	4.0	6.0	4.4		
	4.0	6.0	4.4		
	6.4	9.6	7.04		
	10.0	15.0	11.0		
50-3000	Class 150	3.0	2.2		
	Class 300	7.5	5.5		
50-1000	Class 600	16.5	12.1		
	Class 900	22.5	16.5		
	Class 1500	37.5	27.5		

Main Parts Materials

Part name	Material name or code
Body	Ductile iron, WCB, carbon steel, CF8, CF3, CF8M, CF3M
Plate	WCB, Q235, CF8, CF3, CF8M, CF3M
Stem	20Cr13, 304, 316, 17-4PH
Seat	13Cr, stainless steel, carbide, STL

Metal Seal Butterfly Valve (Quadruple Offset)

Main Design & Manufacturing Standards		
Standard content	Standard	Standard name
Flange standard	GB/T 9113	Integral steel pipe flanges (PN designated)
	GB/T 17241.6	Integral cast iron flanges (PN designated)
	HG/T 20592	Steel pipe flanges (PN designated)
	HG/T 20615	Steel pipe flanges(Class designated)
	HG/T 20623	Large diameter steel pipe flanges (Class designated)
	ASME B16.47	Large Diameter Steel Flanges NPS 26 Through NPS 60 Metric /Inch Standard
	ASME B16.5	Pipe Flanges and Flanged Fittings NPS 1/2 Through NPS 24 Metric/Inch Standard
Structure length standard	GB/T 12221	Metal valves - Face to face, end to end, center toface and center to end dimensions
	ISO 5752:1982	Metal valves for use in flanged pipe systems Face-to-face and center-to-face dimensions, MOD
	API 609	Butterfly Valves: Double-flanged, Lugand Wafer-type, and Butt-welding Ends
Pressure test standard	GB/T 13927	Industrial valves - Pressure testing
	ISO 5208:2015	Industrial valves - Pressure testing of metallic valves, MOD
	API 598	Valve Inspection and Testing
Structural design standard	GB/ T 26146	General valve - Eccentric semi-ball valve
	GB/T 12238	General valves - Flange and wafer connection butterfly valves
Use material standard	GB/T 12226	General purpose industrial valves - Specification of flake graphite iron castings
	GB/T 12227	General purpose industrial valves - Specification of spheroidal graphite iron castings
	GB/T 12229	General purpose industrial valves - Specification of carbon steel castings
	GB/T 12230	General purpose industrial valves - Specification of stainless steel castings
	ASTM A351	Standard Specification for Castings, Austenitic, for Pressure-Containing Parts
	ASTM A216	Standard Specification for Steel Castings, Carbon, Suitable for Fusion Welding, for High-Temperature Service

Operation

Main types: The main types of this valve include manual, worm gear, electric, pneumatic, and hydraulic. Among them, pneumatic valves and hydraulic valves are suitable for pressure air and pressure liquid sources.

Working Principle

Quadruple Offset Design

Offset 1 - axial eccentricity: the rotation center of the valve deviates from the contact plane with the sealing surface, forming eccentricity;

Offset 2 - radial eccentricity: the center of rotation of the valve and the center of the pipeline are not in the same center line;

Offset 3 - angular eccentricity: the center of the valve sealing surface forms an angle with the center of the pipeline;

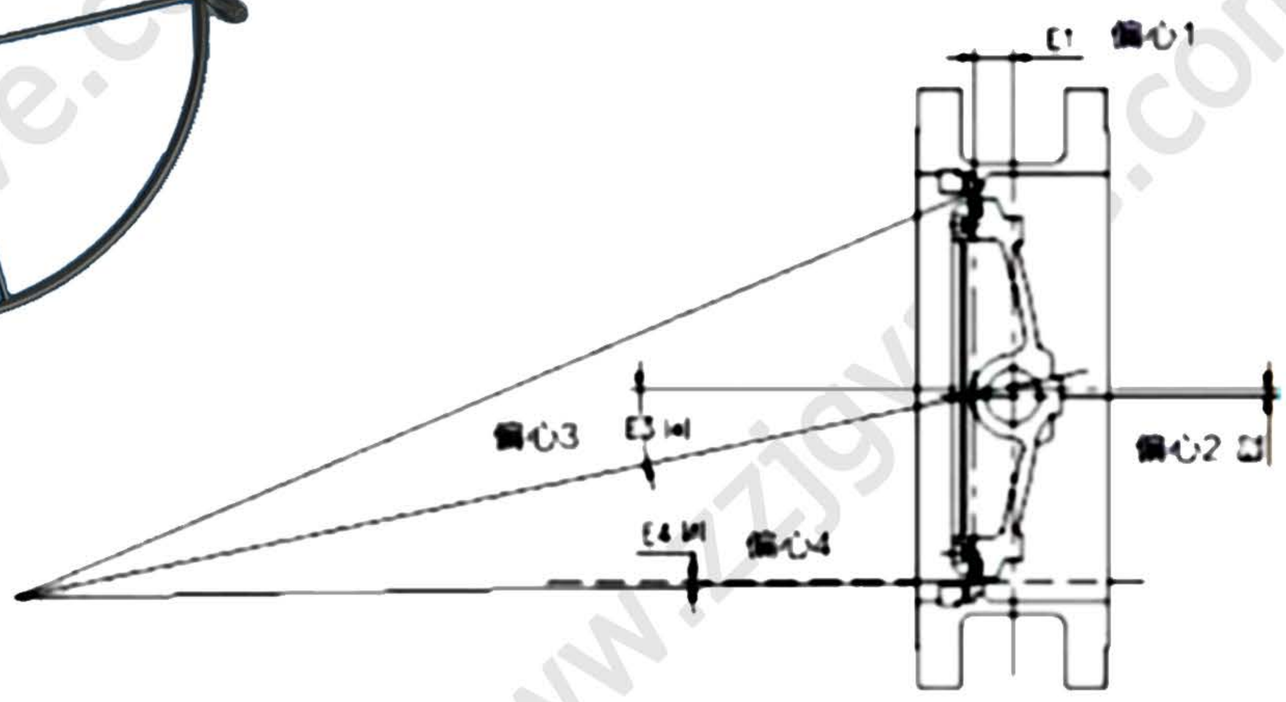

Metal Seal Butterfly Valve (Quadruple Offset)

When the medium flows forward, the force exerted by the driving device on the valve stem drives the wide plate, causing the valve plate sealing surface to generate a forced sealing force, which acts on the valve seat sealing surface while the medium pressure generates an auxiliary sealing force, causing the valve plate sealing surface to press the valve seat sealing surface tightly to form a good seal.

When the medium flows in the opposite direction, driven by the preload force and the piston effect force of the medium, the valve seat sealing surface is pressed against the valve plate sealing surface to form a good seal.

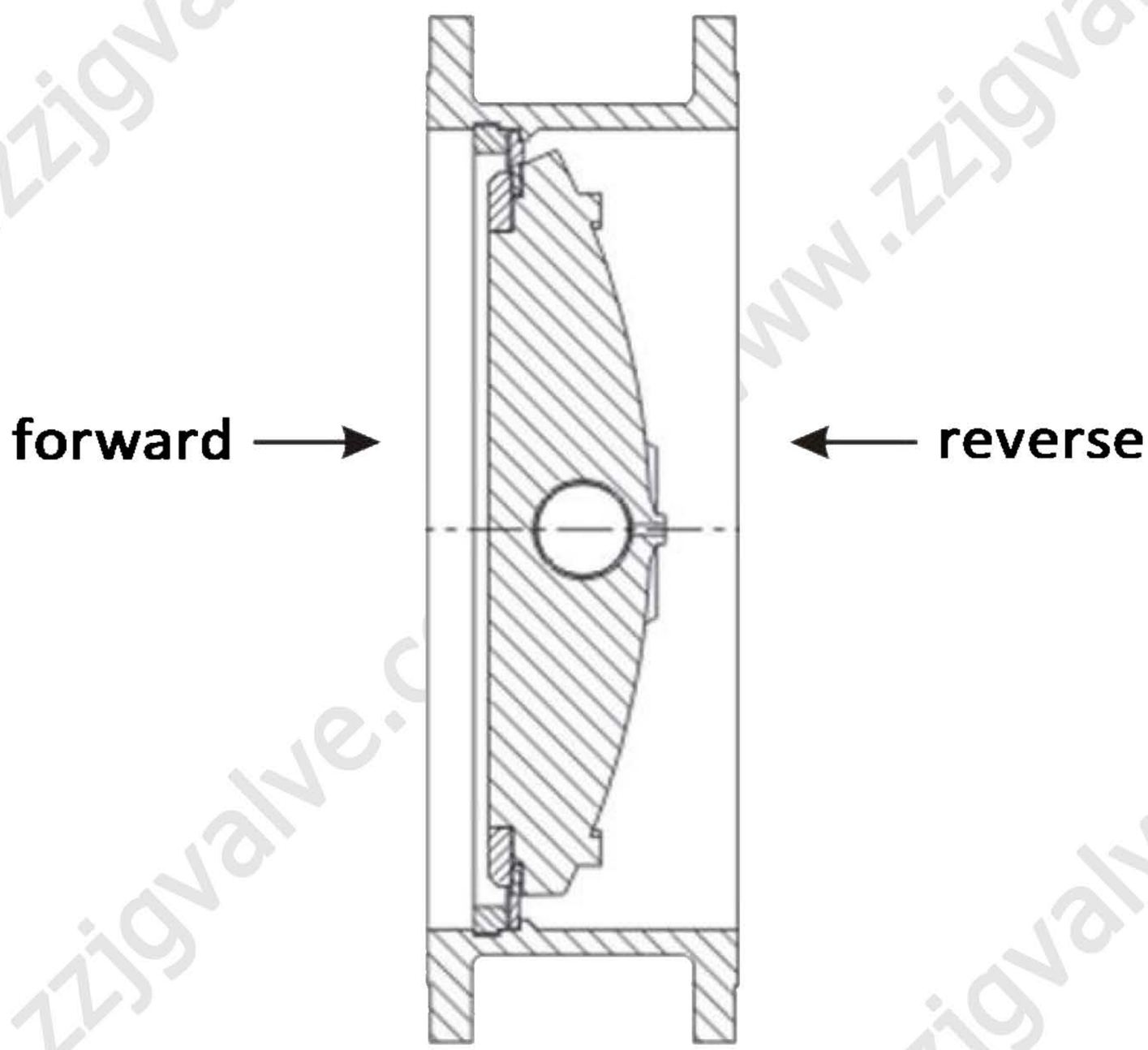

www.zzjgvalve.com

Features

1. Quadruple eccentric cam design for sealing zero leakage.
2. Bi-directional flowing medium & High-quality sealing effect.
3. Designed in strict accordance with API609 standard. Self-alignment for deformation by different working conditions.

removable

non-removable

all metal sealing ring

multi-layer composite

4. According to the requirements of working conditions, the valve seat and sealing ring can produce extremely high hardness and corrosion resistance, with the advantages of erosion resistance, wear resistance, high temperature and high-pressure resistance, long service life, etc.
5. Replaceable sealing pair for maintenance.
6. Small fluid resistance, small installation dimension, small opening/closing torque.

replaceable

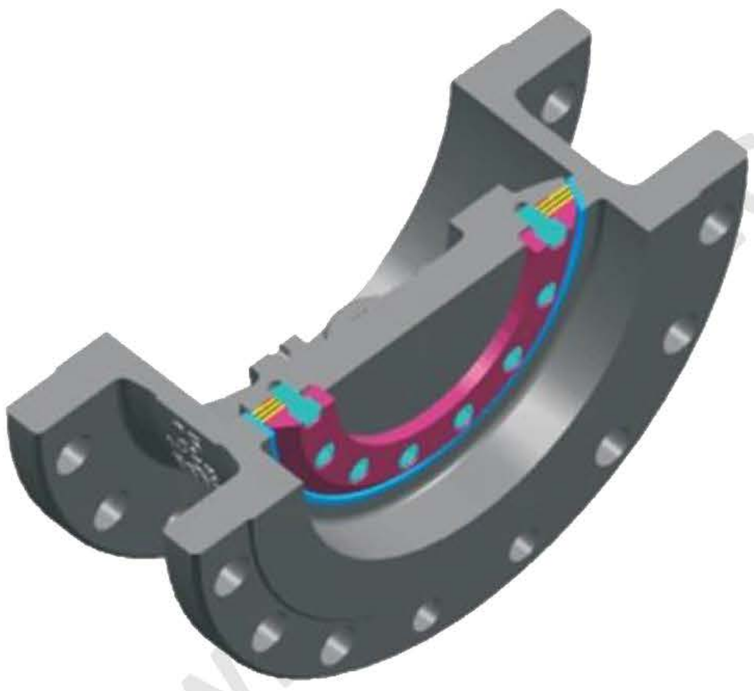

non-replaceable

Metal Seal Butterfly Valve (Quadruple Offset)

Basic Configuration Cross-section Diagram			
No.	Name	Valve body material	Valve body stainless steel material
1a	Body	ASTM A216 WCB/EN10213 1.0619	ASTM A351 CF8M/EN102131.4408
2a	Disc	ASTM A216 WCB/EN10213 1.0619	ASTM A351 CF8M/EN102131.4408
2b	Plate pressure ring	ASTM A276 420	ASTM A182 Type F316ZEN10222-51.4401
2c	Screw	UNS S31600	UNS S31600
3a	Sealing ring	ASTM A182 Type F304/EN10222-T5	ASTM A182 Type F316/EN10222-51.4401
3b	Graphite gasket	UNS S31600+石墨	UNS S31600+石墨
4a	Upper Stem	UNS S17400(17-4PH)	UNS S17400(17-4PH)
4b	Pin	UNS S17400(17-4PH)	UNS S17400(17-4PH)
4c	Lower stem	UNS S17400(17-4PH)	UNS S17400(17-4PH)
4d	Pin	UNS S17400(17-4PH)	UNS S17400(17-4PH)
5a	Double-end stud	ISO3506 A4(AISI 316)	ISO3506 A4(AISI 316)
5b	Nut	UNS S31600	UNS S31600
5c	Packing gland	ASTM A216 WCB/EN102131.0619	ASTM A351 CF8M/EN102131.4408
5d	Packing	Graphite	Graphite
5e	Packing ring	UNS S31600	UNS S31600
5f	Upper shaft sleeve	UNS S31600+H60	UNS S31600+H60
5h	Cock	UNS S31600	UNS S31600
6a	Bottom flange	A105	ASTM A182 Type F316/EN10222-51.4401
6b	Screw	UNS S31600	UNS S31600
6c	Winding graphite gasket	UNS S31600+石墨	UNS S31600+石墨
7a	Locking ring	UNS S31600	UNS S31600
7b	Lower shaft sleeve	UNS S31600+H60	UNS S31600+H60
7C	Block	A105	UNS S31600
7d	Thrust bearing	A105	UNS S31600
7e	Thrust bearing gasket	A105	UNS S31600
8a	Seat ring	ASTM A182 Type F304/EN10222-T5	ASTM A182 Type F316/EN10222-51.4401
8b	Seat surface hardening treatment	Stellite* gr.21	Stellite* gr.21
8C	Graphite gasket	UNS S31600+石墨	UNS S31600+石墨
9a	Bracket	ASTM A216 WCB/EN10213 1.0619	ASTM A216 WCB/EN102131.0619
9b	Screw	UNS S31600	UNS S31600
10a	Ring	ASTM A276 420	ASTM A182 Type F316ZEN10222-51.4401
10b	Bolt	UNS S31600	UNS S31600

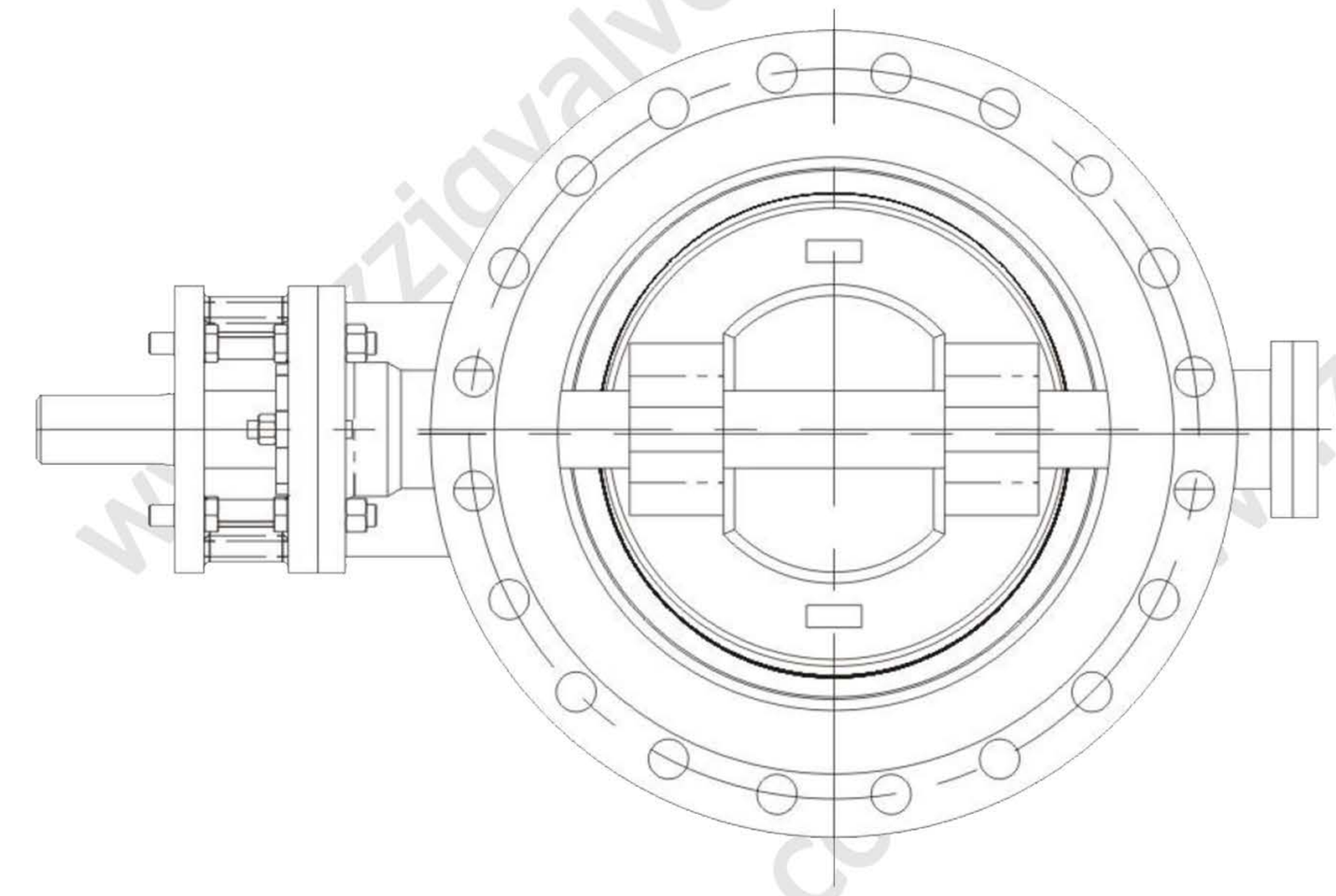

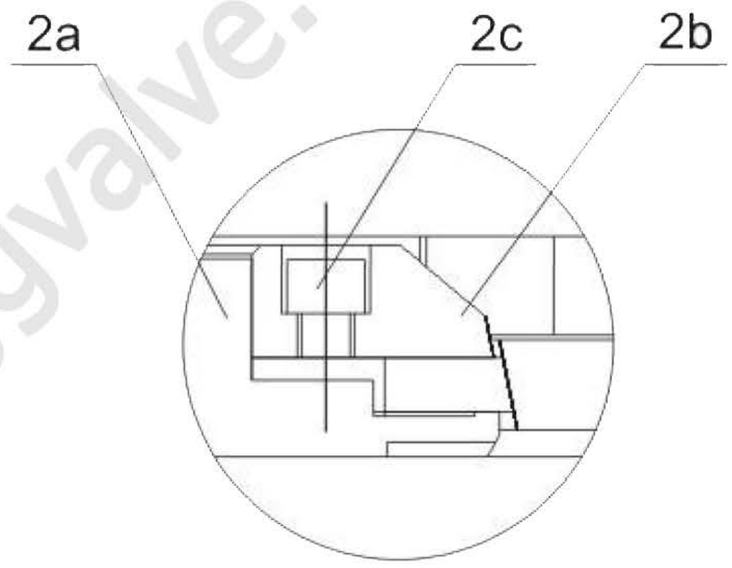

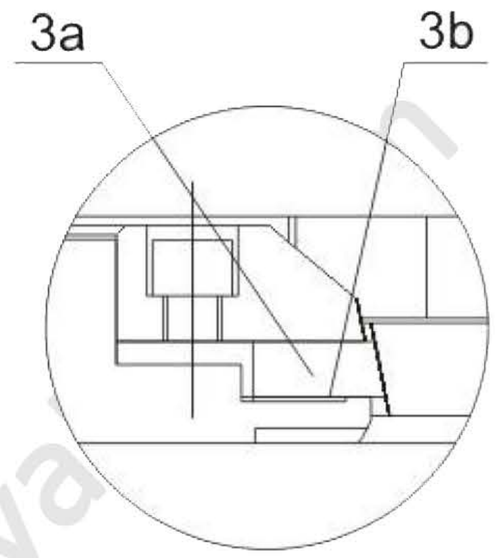

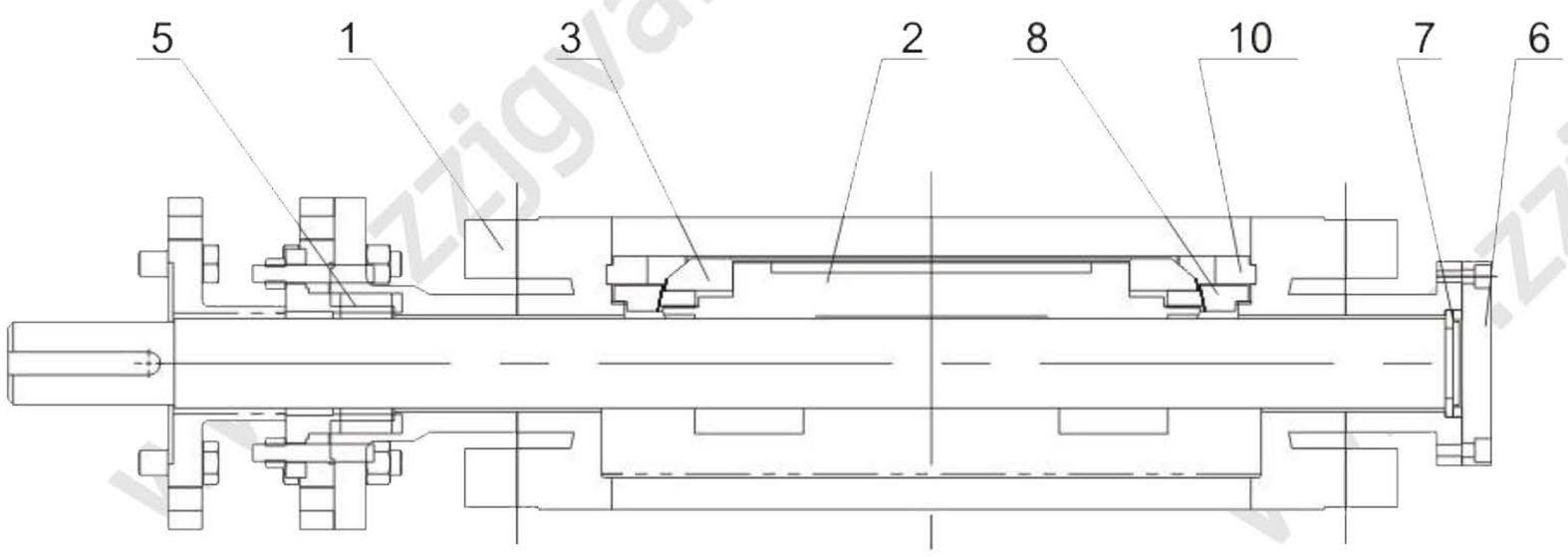

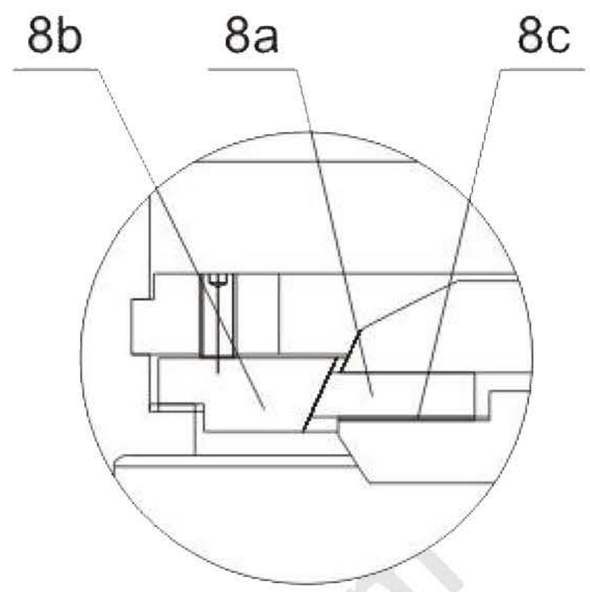

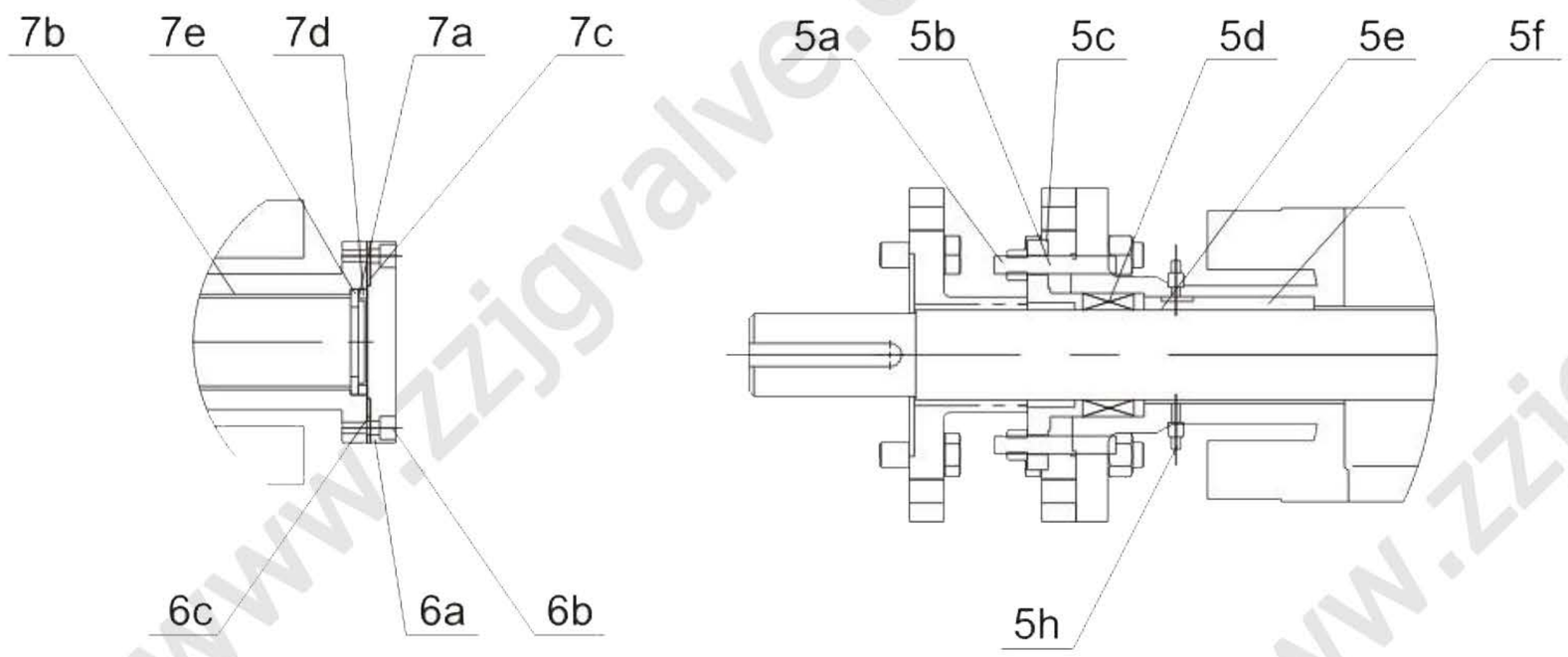

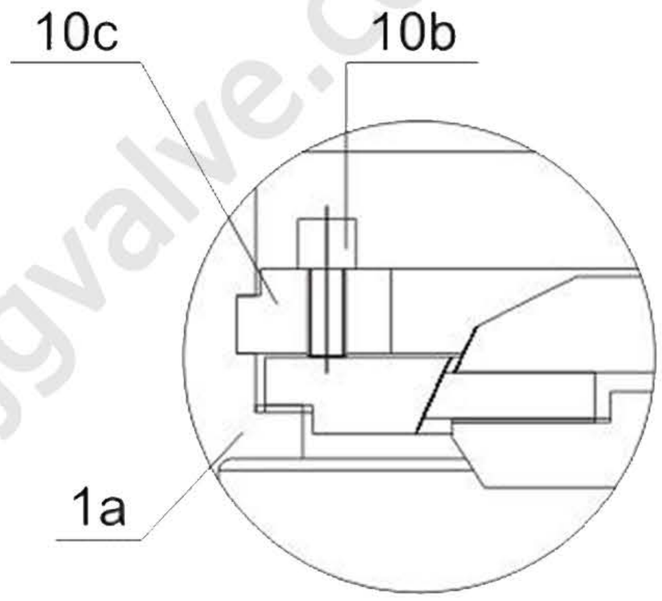

www.zzjgvalve.com

Metal Seal Butterfly Valve (Quadruple Offset)

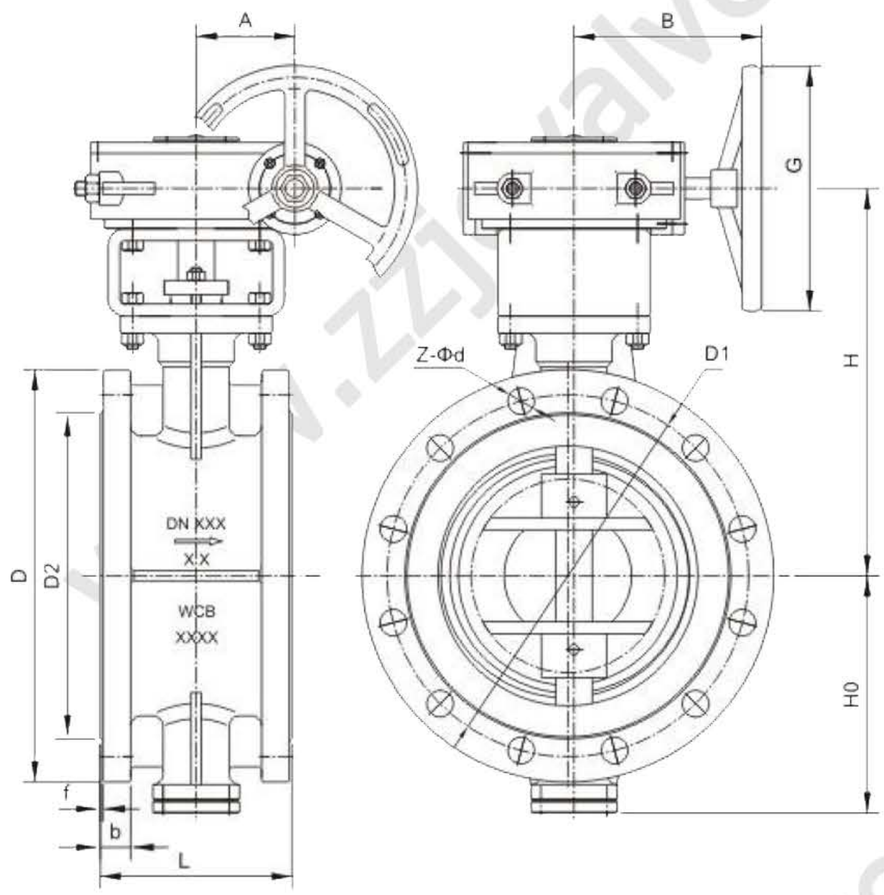

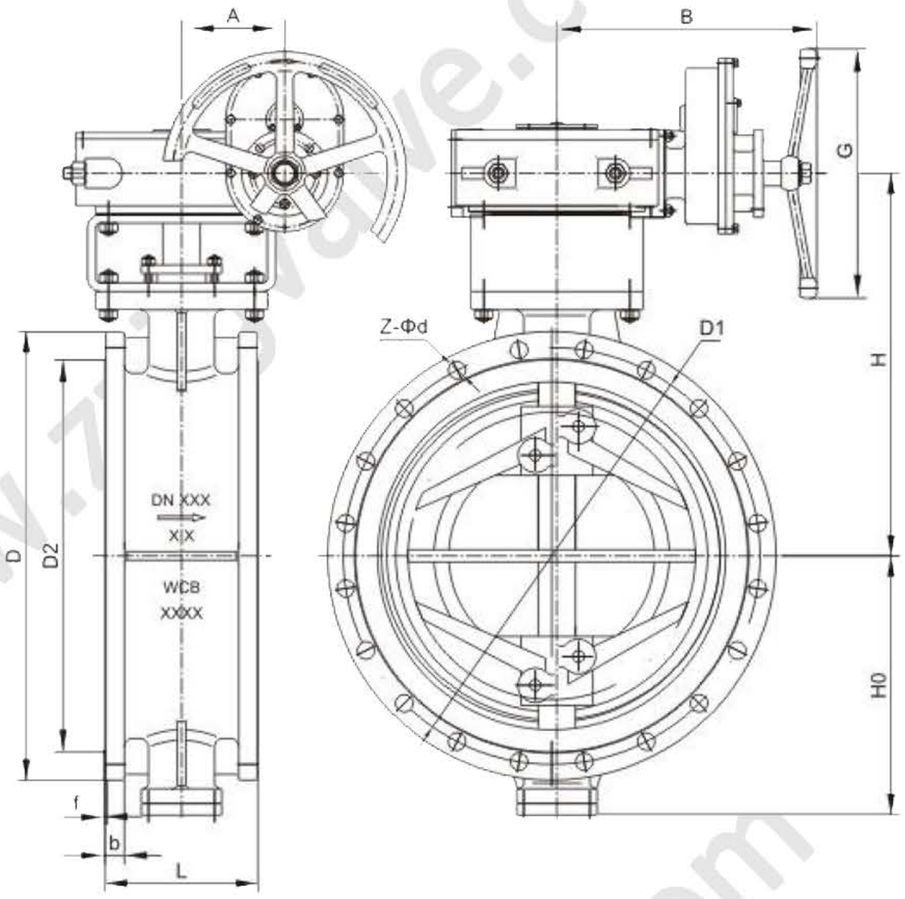

Type:D344H-10/16C DN50～DN2000 NPS2”～80”																							
DN	L	1.0MPa											1.6MPa										
		Flange Size						Dimension					Flange Size						Dimension				
		D	D1	D2	f	b	Z-Φd	H0	H	A	B	G	D	D1	D2	f	b	Z-Φd	H0	H	A	B	G
50	108	165	125	102	3	18	4-Φ18	82.5	195	50	144	180	165	125	102	3	18	4-Φ18	82.5	195	50	144	180
65	112	185	145	122	3	18	8-Φ18	92.5	215	50	144	180	185	145	122	3	18	8-Φ18	92.5	215	50	144	180
80	114	200	160	138	3	20	8-Φ18	100	215	50	144	180	200	160	138	3	20	8-Φ18	100	215	50	144	180
100	127	220	180	158	3	20	8-Φ18	110	235	50	144	180	220	180	158	3	20	8-Φ18	110	235	50	144	180
125	140	250	210	188	3	22	8-Φ18	125	290	63	200	300	250	210	188	3	22	8-Φ18	125	290	63	200	300
150	140	285	240	212	3	22	8-Φ22	180	310	63	200	300	285	240	212	3	22	8-Φ22	180	310	63	200	300
200	152	340	295	268	3	24	8-Φ22	202	360	63	200	300	340	295	268	3	24	12-Φ22	202	360	63	200	300
250	165	395	350	320	3	26	12-Φ22	235	395	80	230	350	405	355	320	3	26	12-Φ26	235	395	80	230	350
300	178	445	400	370	4	26	12-Φ22	265	425	80	230	350	460	410	378	4	28	12-Φ26	265	425	80	230	350
350	190	505	460	430	4	26	16-Φ22	305	475	125	260	400	520	470	438	4	30	16-Φ26	305	475	125	260	400
400	216	565	515	482	4	26	16-Φ26	335	520	125	260	400	580	525	490	4	32	16-Φ30	335	520	125	260	400
450	222	615	565	532	4	28	20-Φ26	365	550	125	260	400	640	585	550	4	40	20-Φ30	365	550	125	260	400
500	229	670	620	585	4	28	20-Φ26	405	610	125	370	400	715	650	610	4	44	20-Φ33	405	610	125	370	400
600	267	780	725	685	5	34	20-Φ30	450	655	160	398	500	840	770	725	5	54	20-Φ36	445	685	160	398	500
700	292	895	840	800	5	34	24-Φ30	520	725	160	398	500	910	840	795	5	40	24-Φ36	520	725	200	418	600
800	318	1015	950	905	5	36	24-Φ33	605	795	200	418	600	1025	950	900	5	42	24-Φ39	605	795	200	418	600
900	330	1115	1050	1005	5	38	28-Φ33	655	885	200	418	700	1125	1050	1000	5	44	28-Φ39	655	885	263	510	700
1000	410	1230	1160	1110	5	38	28-Φ36	715	950	200	418	700	1255	1170	1115	5	46	28-Φ42	715	950	263	510	700
1200	470	1455	1380	1330	5	44	32-Φ39	840	1125	263	510	700	1485	1390	1330	5	52	32-Φ48	840	1125	333	550	800
1400	530	1675	1590	1535	5	48	36-Φ42	980	1275	333	550	800	1685	1590	1530	5	58	36-Φ48	980	1275	333	550	800
1600	600	1915	1820	1760	5	52	40-Φ48	1125	1470	333	550	800	1930	1820	1750	5	64	40-Φ56	1125	1470	374	590	900
1800	670	2115	2020	1960	5	56	44-Φ48	1240	1585	374	590	900	2130	2020	1950	5	68	44-Φ56	1240	1585	374	590	900
2000	760	2325	2230	2170	5	60	48-Φ48	1380	1720	374	590	900	2345	2230	2150	5	70	48-Φ62	1380	1720	453	635	1000

ZZJG VALVE

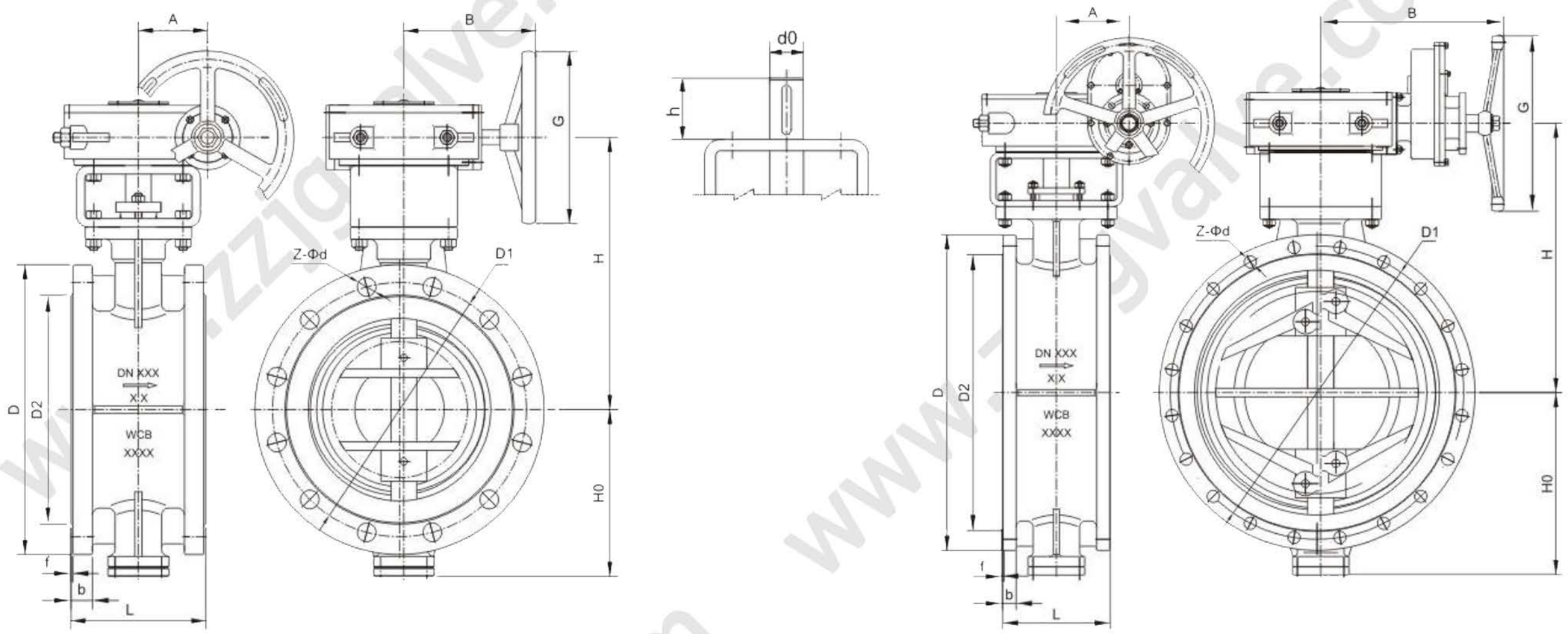

Type:D344H-25/40C DN50～DN1600 NPS2”～64”																									
DN	L	2.5MPa												4.0MPa											
		Flange Size							Dimension					Flange Size							Dimension				
		D	D1	D2	f	b	z-Φd	Z-W	H0	H	A	B	G	D	D1	D2	f	b	z-Φd	Z-W	H0	H	A	B	G
50	108	165	125	102	3	20	4-Φ18	-	82.5	195	50	144	180	165	125	102	3	20	4-Φ18	-	82.5	195	50	144	180
65	112	185	145	122	3	22	8-Φ18	-	92.5	215	50	144	180	185	145	122	3	22	8-Φ18	-	92.5	210	50	144	180
80	114	200	160	138	3	24	8-Φ18	-	100	215	50	144	180	200	160	138	3	24	8-Φ18	-	100	230	50	144	180
100	127	235	190	162	3	24	8-Φ22	-	118	235	50	144	180	235	190	162	3	24	8-Φ22	-	118	250	50	144	180
125	140	270	220	188	3	26	8-Φ26	-	135	290	63	200	300	270	220	188	3	26	8-Φ26	-	135	295	63	200	300
150	140	300	250	218	3	28	8-Φ26	-	180	310	63	200	300	300	250	218	3	28	8-Φ26	-	215	340	80	230	350
200	152	360	310	278	3	30	8-Φ26	4-M24	185	370	80	230	350	375	320	285	3	34	12-Φ30	-	220	390	80	230	350
250	165	425	370	335	3	32	8-Φ30	4-M27	215	397	80	230	350	450	385	345	3	38	8-Φ33	4-M30	265	485	125	260	400
300	178	485	430	395	4	34	12-Φ30	4-M27	250	455	125	260	400	515	450	310	4	42	12-Φ33	4-M30	290	490	125	260	400
350	190	555	490	450	4	38	12-Φ33	4-M30	285	495	125	260	400	580	510	465	4	46	12-Φ36	4-M33	310	540	125	370	400
400	216	620	550	505	4	40	12-Φ36	4-M33	330	535	125	370	400	660	585	535	4	50	12-Φ39	4-M36	340	620	160	398	500
450	222	670	600	555	4	46	16-Φ36	4-M33	345	560	125	370	400	685	610	560	4	57	16-Φ39	4-M36	390	645	200	418	600
500	229	730	660	615	4	48	16-Φ36	4-M33	390	620	160	398	500	755	670	615	4	57	16-Φ42	4-M39	415	670	200	418	600
600	267	845	770	720	5	58	16-Φ39	4-M36	445	685	200	418	600	890	795	735	5	72	16-Φ48	4-M45	500	740	200	418	600
700	292	960	875	820	5	50	20-Φ42	4-M39	545	750	200	418	600	995	900	840	5	64	20-Φ48	4-M45	580	900	263	510	700
800	318	1085	990	930	5	54	20-Φ48	4-M45	625	870	263	510	700	1140	1030	960	5	72	20-Φ56	4-M52	665	975	333	550	800
900	330	1185	1090	1030	5	58	24-Φ48	4-M45	685	965	263	510	700	1250	1140	1070	5	76	24-Φ56	4-M52	690	1010	333	550	800
1000	410	1320	1210	1140	5	62	24-Φ56	4-M52	755	1040	263	510	700	1360	1250	1180	5	80	24-Φ56	4-M52	755	1090	333	550	800
1200	470	1530	1420	1350	5	70	28-Φ56	4-M52	860	1180	333	550	800	1575	1460	1380	5	88	28-Φ62	4-M56	950	1365	374	590	900
1400	530	1755	1640	1560	5	76	32-Φ62	4-M56	1020	1365	374	590	900	1795	1680	1600	5	98	32-Φ62	4-M56	1090	1475	453	635	1000
1600	600	1975	1860	1780	5	84	36-Φ62	4-M56	1190	1580	374	590	900	-	-	-	-	-	-	-	-	-	-	-	-

Metal Seal Butterfly Valve (Quadruple Offset)

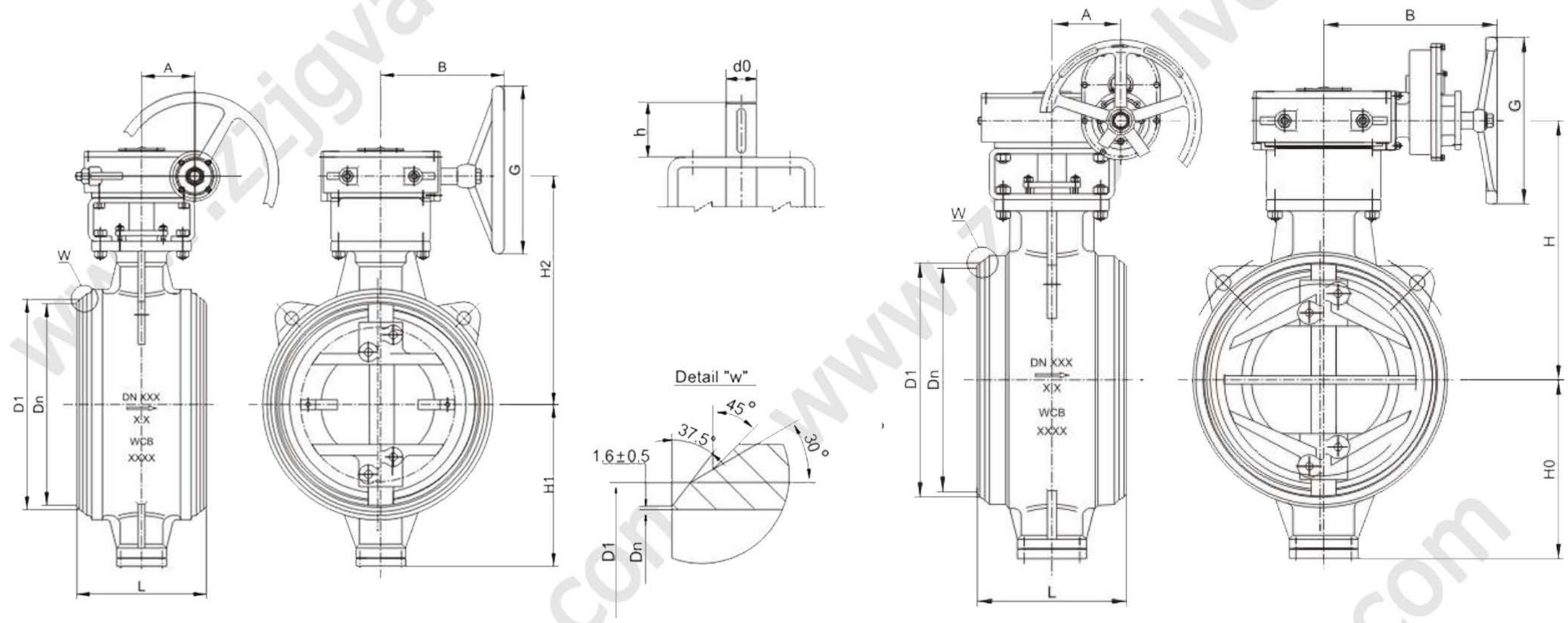

Type:D364H-10/16C DN80～1800 NPS3"～72"																
DN	NPS	L	1.0MPa							1.6MPa						
			BW		Dimension					BW		Dimension				
			Dn	D1	H0	H	A	B	G	Dn	D1	H0	H	A	B	G
80	3"	180	82	91	85	225	50	144	180	82	91	85	225	50	144	180
100	4"	190	106	117	100	245	50	144	180	106	117	100	245	50	144	180
125	5"	200	132	144	170	290	63	200	300	132	144	170	290	63	200	300
150	6"	210	159	172	180	310	63	200	300	159	172	180	310	63	200	300
200	8"	230	206	223	205	360	63	200	300	206	223	205	360	63	200	300
250	10"	250	259	278	235	395	80	230	350	259	278	235	395	80	230	350
300	12"	270	308	329	265	425	80	230	350	308	329	265	425	80	230	350
350	14"	290	340	362	305	475	125	260	400	340	362	305	475	125	260	400
400	16"	310	388	413	335	520	125	260	400	388	413	335	520	125	260	400
450	18"	330	439	464	365	550	125	260	400	439	464	365	550	125	260	400
500	20"	350	488	516	405	615	125	370	400	488	516	405	615	125	370	400
600	24"	390	589	619	465	665	160	398	500	589	619	465	665	160	398	500
700	28"	430	693	721	540	730	200	418	600	693	721	540	730	200	418	600
800	32"	470	793	825	625	865	200	418	600	793	825	625	865	200	418	600
900	36"	510	894	927	690	930	263	510	700	894	927	690	930	263	510	700
1000	40"	550	996	1029	755	1030	263	510	700	996	1029	755	1030	263	510	700
1200	48"	630	1194	1235	880	1165	333	550	800	1194	1235	880	1165	333	550	800
1400	56"	710	1394	1440	1010	1335	333	550	800	1394	1440	1010	1335	333	550	800
1600	64"	790	1594	1640	1125	1470	374	590	900	1594	1640	1125	1470	374	590	900
1800	72"	870	1794	1840	1240	1585	374	590	900	1794	1840	1240	1585	374	590	900

ZZJG VALVE

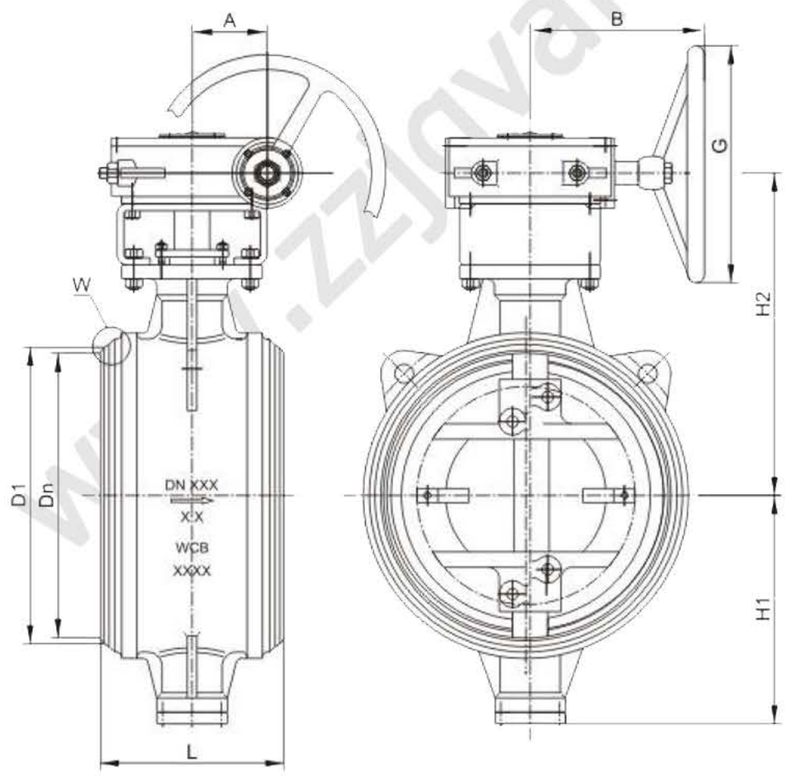

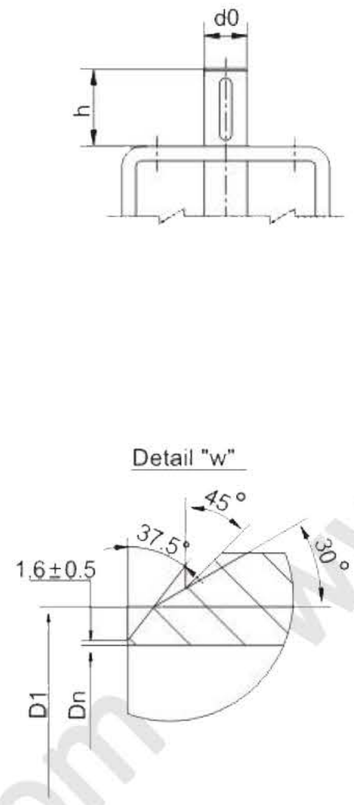

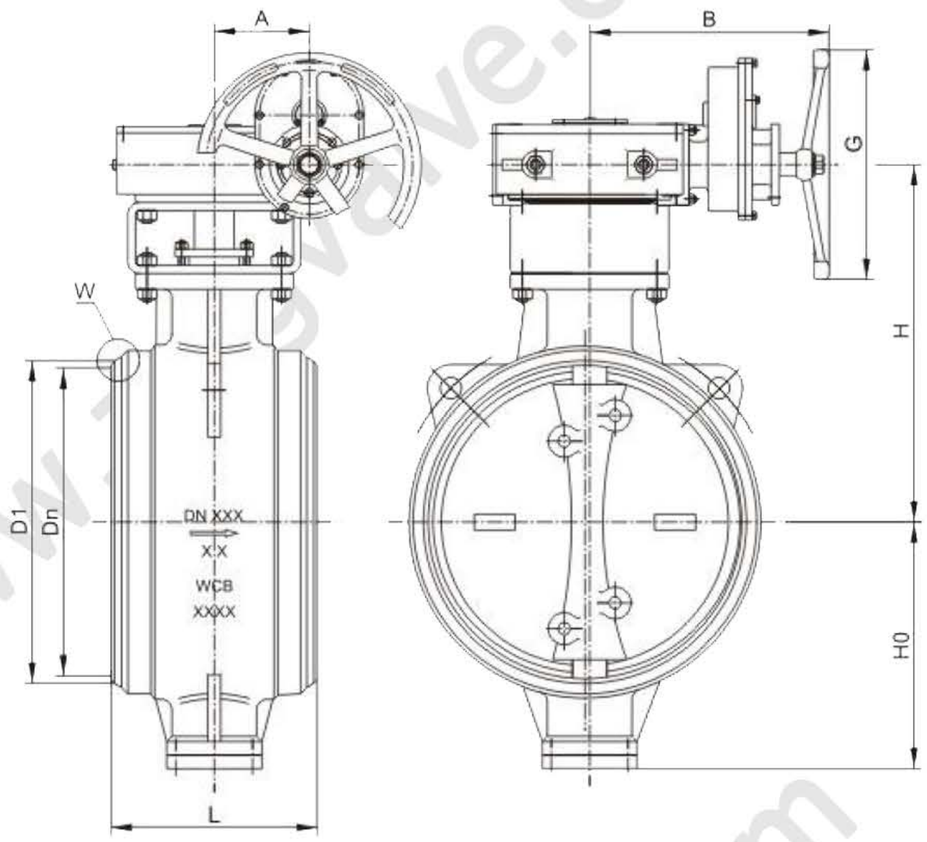

Type:D364H-25/40C DN80～1600 D364H-CL150 NPS3"～64"																
DN	NPS	L	2.5MPa							4.0MPa						
			BW		Dimension					BW		Dimension				
			Dn	D1	H0	H	A	B	G	Dn	D1	H0	H	A	B	G
80	3"	180	78	91	85	225	50	144	180	78	91	85	225	50	144	180
100	4"	190	102	117	100	245	50	144	180	102	117	100	245	50	144	180
125	5"	200	128	144	170	290	63	200	300	128	144	170	290	63	200	300
150	6"	210	154	172	180	310	63	200	300	154	172	180	310	80	230	350
200	8"	230	203	223	205	360	80	230	350	203	223	205	360	80	230	350
250	10"	250	255	278	235	395	80	230	350	255	278	235	395	125	260	400
300	12"	270	305	329	265	425	125	260	400	305	329	265	425	125	260	400
350	14"	290	337	362	305	475	125	260	400	337	362	305	475	125	370	400
400	16"	310	387	413	335	520	125	370	400	387	413	340	620	160	398	500
450	18"	330	438	464	365	550	125	370	400	438	464	390	645	200	418	600
500	20"	350	489	516	405	615	160	398	500	489	516	415	670	200	418	600
600	24"	390	591	619	465	665	200	418	600	591	619	500	740	200	418	600
700	28"	430	686	721	540	760	200	418	600	686	721	580	900	263	510	700
800	32"	470	787	825	625	865	263	510	700	787	825	665	975	333	550	800
900	36"	510	889	927	690	965	263	510	700	889	927	690	1010	333	550	800
1000	40"	550	990	1029	755	1040	263	510	700	-	-	-	-	-	-	-
1200	48"	630	1194	1235	880	1165	333	550	800	-	-	-	-	-	-	-
1400	56"	710	1394	1440	1010	1355	374	590	900	-	-	-	-	-	-	-
1600	64"	790	1594	1640	1190	1580	374	590	900	-	-	-	-	-	-	-

ZZJG VALVE MORE VALUE

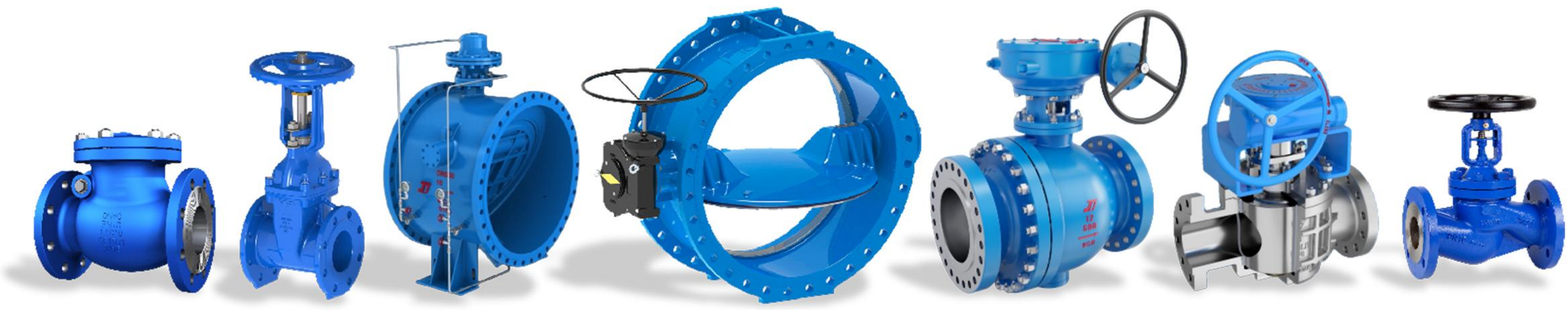

ZHENGZHOU JINGGONG TECHNOLOGY CO., LTD.

Tel: +86-371-55659925

Fax: +86-371-55659926

Email: info@zzjgvalve.com

Web: www.zzjgvalve.com

Address: Chuangye Road, Gaoshan Town, Zhengzhou City, China 450000

All rights reserved by Zhengzhou Jinggong Technology Co., Ltd. The products are protected by patents and legal liability will be pursued for infringement. This sample only introduces some products. If there are any changes without notice, please contact our company to obtain the latest version.