ZZJG VALVE

Multifunctional Check Valve

TOTAL SOLUTIONS FOR FLOW SYSTEM

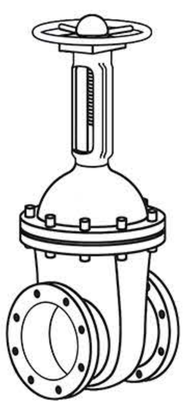
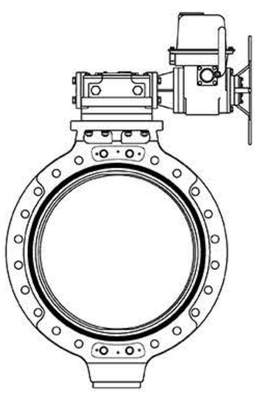
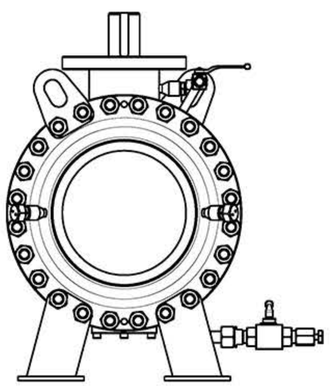
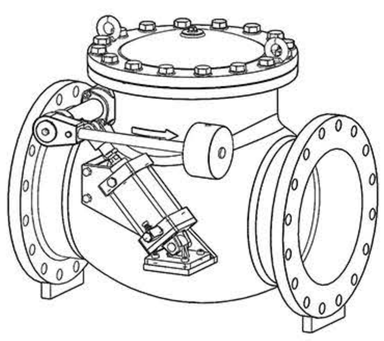
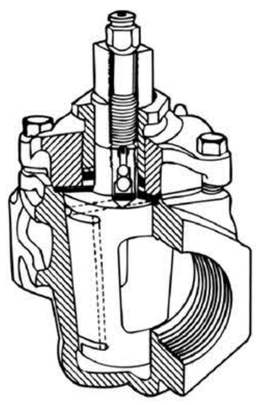
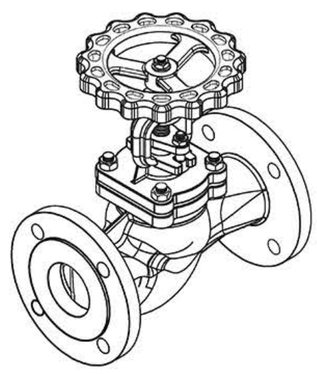

ABOUT US

ZZJG VALVE

ZHENGZHOU JINGGONG TECHNOLOGY CO., LTD is located in "Hometown of Valve in China" Gaoshan Town, Xingyang City, Henan Province. It is a high-tech enterprise in one line of design, manufacturing, sales and services.

Founded in 1981, after more than 40 years of development, it has become a professional valve manufacturer. With 103,180,000 RMB of registered capital, it covers an area of 26,000 ㎡ and owns professional workshops.

Aim: loyal to and customer, optimal management, rigorous and pragmatic and to promote China's valve industry to a higher level and ZZJG brand a leading position.

Certifications: ISO9001 Quality System Certification, ISO14001 Environment System Certification, ISO45001 Occupational Health and Safety Management Certification, TS Special Equipment License, API 609, API 6D, European Union CE Certification, EAC, SGS Certification, WRAS Certification, Utility Model Patent Certificates, etc.

Main products: PN0.25-32MPa, DN50-3000, soft/metal seal butterfly valves, plug valves, ball valves, gate valves, globe valves, check valves, control valves, etc.

Application: Water engineering, Electric power, Petroleum, Chemical industry, Petrochemical industry, Heating, Pharmaceuticals, Metallurgy, etc.

www.zzjgvalve.com

ZZJG CASES

The company strictly controls and checks the quality of every link and process. Product design has been incorporated into a set of extremely rigorous and precise procedures; from design, material selection, manufacturing, assembly to operation, every link must undergo rigorous testing procedures, strict control, and high quality, so that customers can use it. At the same time, we deeply feel our rigorous and pragmatic quality purpose.

Multifunctional Check Valve

Overview

It is developed on the basis of absorbing micro-resistance slow-closing butterfly check valves, hydraulically-controlled check butterfly valves, and multifunctional water pump control valves.

It has the functions of electric gate valve, electric butterfly valve and check valve, and uses quick closing and slow closing actions to eliminate water hammer hazards and protect the safety of water pumps and pipe systems.

Applications

The valve is a new type of pump station controlling equipment with novel structure, advanced performance and reliable operation. It is widely used in water supply and drainage systems, sewage pump rooms, chemical industry and other industries such as electric power, environmental protection, metallurgy, petroleum, petrochemical, chemical, water conservancy, municipal administration, and food, fluid and other conveying systems.

ZZJG VALVE

Working Principle

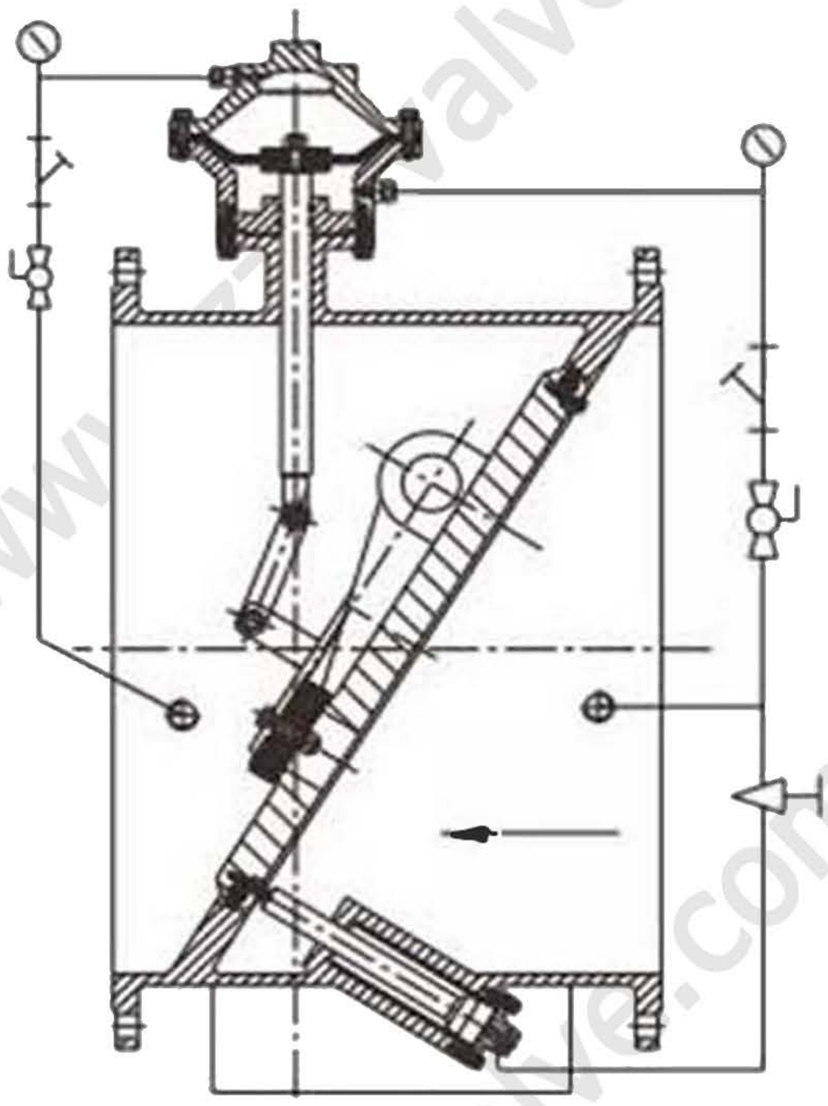

Diaphragm Type

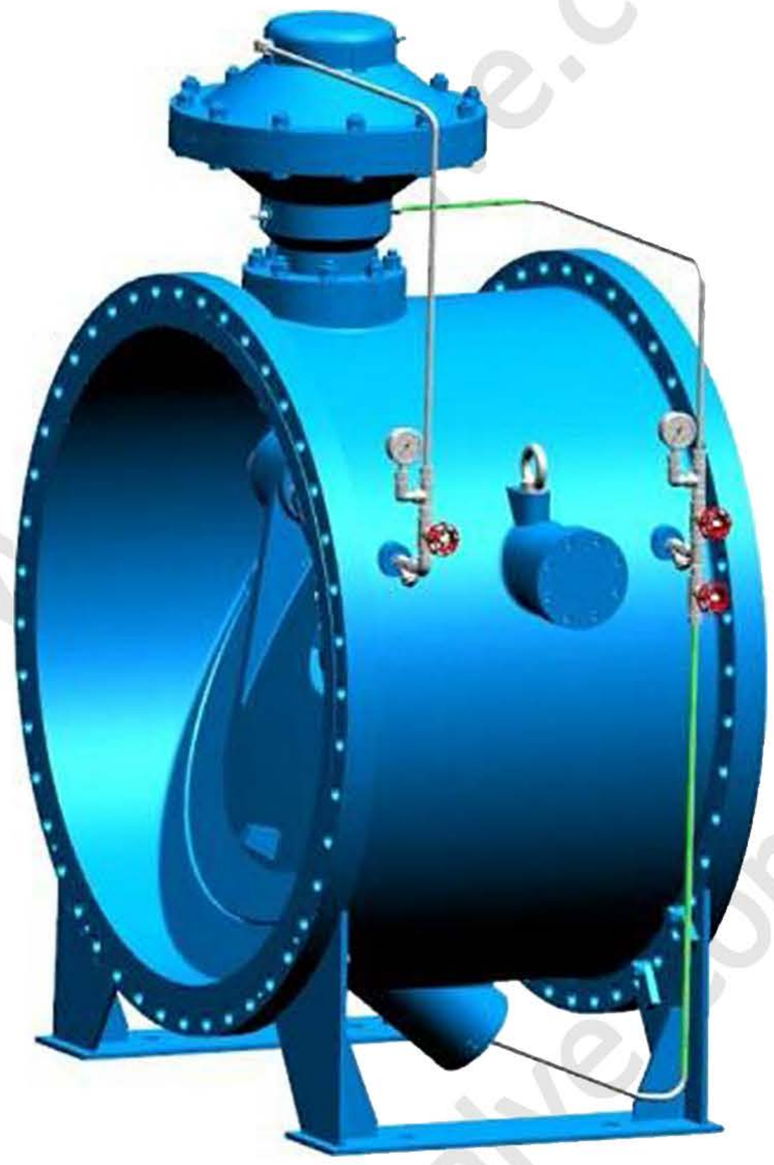

Open Valve

When the water pump is started, the water at the inlet end enters the diaphragm chamber or the lower part of the piston cylinder. Under the pressure of the water, the diaphragm or piston is pushed upward to drive the small valve disc to slowly open. The large valve disc opens simultaneously with the small valve disc under the push of hydraulic power to complete valve opening.

The valve opening speed can be adjusted according to the requirements of the working conditions, and the stop valve of the control pipe system can be adjusted to achieve the best condition.

Multifunctional Check Valve

Close Valve

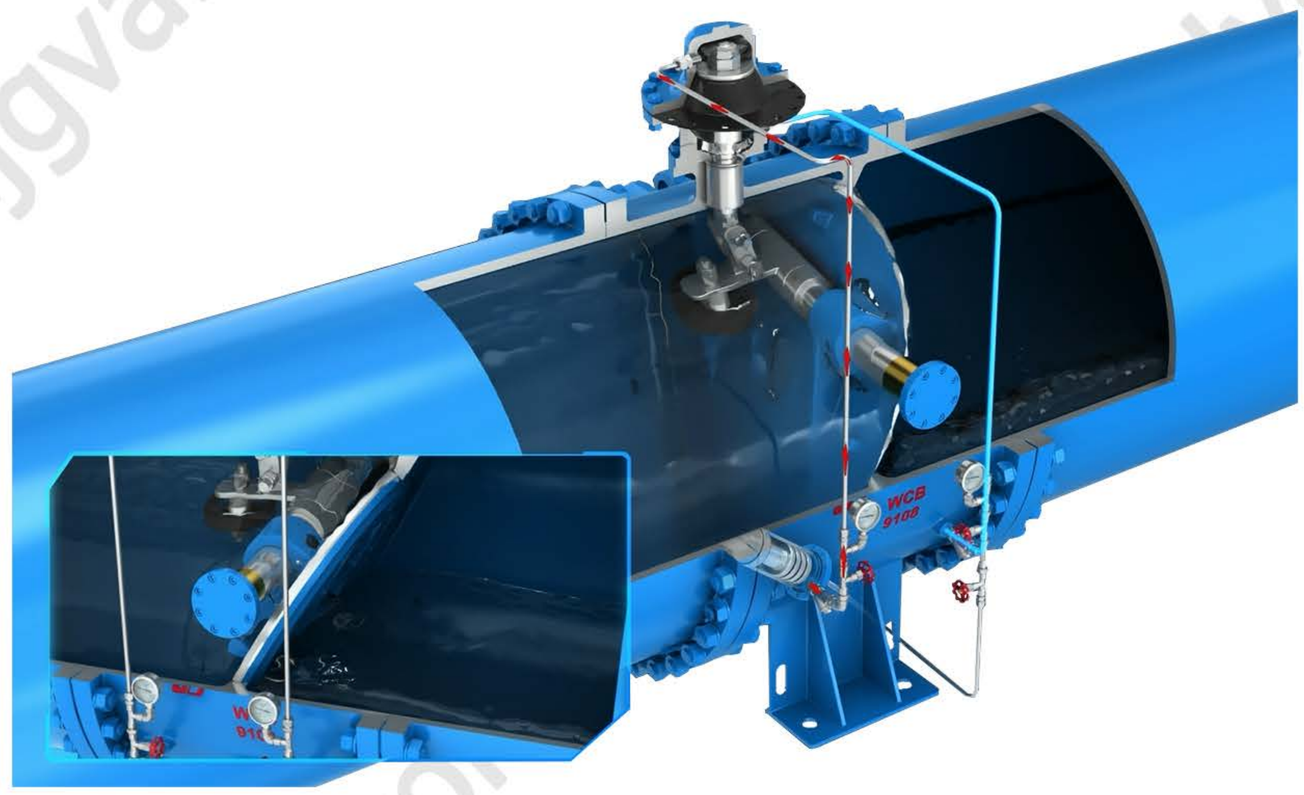

When the pump is stopped, the flow rate in the valve decreases sharply, the medium at the inlet end of the valve loses pressure, and the large valve disc automatically closes because of its own gravity, cutting off 70 to 80% of the water flow.

At the same time, part of the return water enters the diaphragm cavity or the upper part of the piston cylinder. Pushing the diaphragm or piston downward drives the small valve disc to close slowly, and finally closes.

The valve closing time can be achieved by adjusting the stop valve of the control pipe system to control the water hammer peak within the specified range.

ZZJG VALVE

Features

Diverse Functions

Cut-off, check-back, and elimination of water hammer. One valve replaces multiple valves, saving the total investment in equipment.

Beautiful Appearance

A top-mounted control device, which has a small external space, simple internal structure, and strong operational reliability.

Easy Maintenance

The opening and closing of the valve is driven by the transported medium. It does not require personnel or external force to operate, which is very convenient.

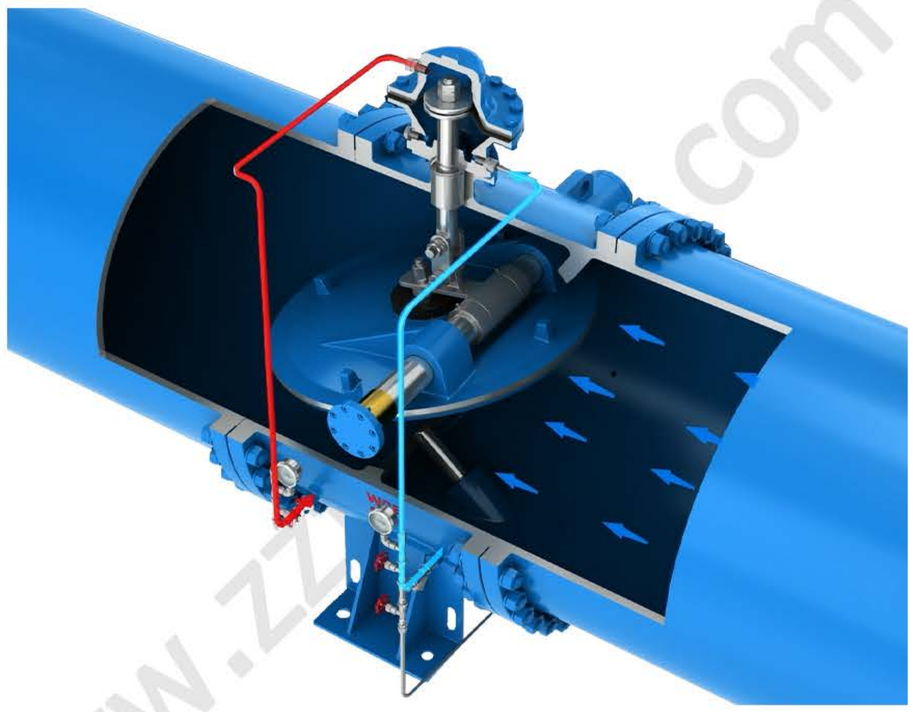

Reliable Sealing & Zero Leakage

Using soft sealing structure and metal hard sealing structure, the friction torque is small. The oblique eccentric structure sealing pair shortens the valve closing stroke, reduces the sliding distance, and reduces friction torque, achieving an instant separation. Therefore, it has the functions of sediment prevention and automatic pressure compensation.

www.zzjgvalve.com

Multifunctional Check Valve

Features

Slowly Open The Pump

During the pump starting, the valve inlet pressure reach a predetermined value before the valve opens, which can reduce the pump starting current and protect the motor and electronic control system.

When stopping the pump, it first closes quickly and then slowly closes, effectively eliminating water hammer and ensuring system safety.

Butterfly Structure

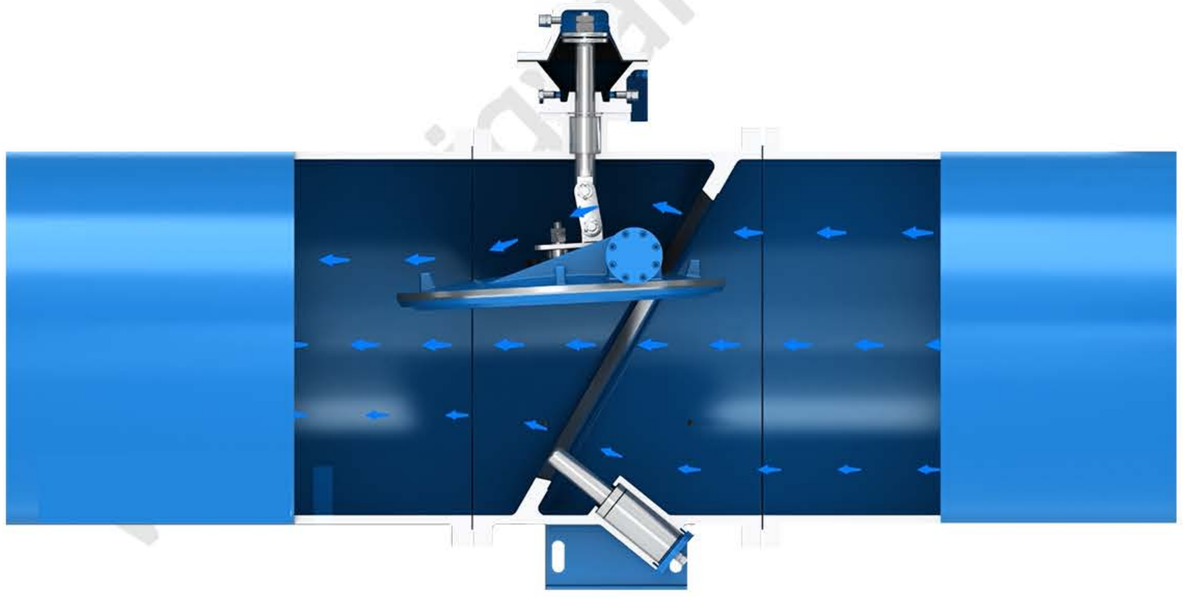

It adopts butterfly structure, which is small in size, light in weight and takes up little space. It reduces costs while increasing system reliability and stability and saving energy consumption.

Buffer Piston Damping Protection Device

When the nominal diameter is > DN300, the valve is equipped with a buffer piston damping protection device, which can effectively protect the valve sealing surface and the vibration and sound of closing the valve.

ZZJG VALVE

Technical Parameters

Valve Body Material						
Material	QT450-10	WCB	OCr18Ni9	00Cr18Ni10	OCr18N12Mo2	00Cr17Ni14Mo2
	ASTM A536 Gr 65-45-12	ASTM A216 WCB	ASTM A351 CF8	ASTM A351 CF3	ASTM A351 CF8M	ASTM A351 CF3M

Technical Parameters				
Size	Pressure（MPa）	Test pressure(MPa)		Working temperature(℃)
		Shell test	Sealing test	
DN50~2000 NPS8"～80"	0.6	0.9	0.66	-40℃～250℃
	1	1.5	1.1	
	1.6	2.4	1.76	
	2.5 - Class150	3.75	2.75	
Valve opening time (adjustable)		10～120 seconds		
Valve closing time（adjustable）		Quick closing 1～5 seconds; Slow closing 5～90 seconds		
Applicable media		Water, raw water, sewage, oil, etc.		

The Main Range of Applicable Standards		
Standard content	Standard	Standard name
Design and manufacturing standard	CJ/T 379	Multi-functional tilting disc valve
Flange standard	GB/T 17241.6	Integral cast iron flanges
	GB/T 9113	Integral steel pipe flanges
	HG/T 20592	Steel pipe flanges (PN designated)
	HG/T 20615	Steel pipe flanges (Class designated)
	HG/T 20623	Large diameter steel pipe flanges (Class designated)
Structure length standard	GB/T 12221	Metal valves - Face to face, end to end, center to face and center to end dimensions
	ISO 5752:1982	Metal valves for use in flanged pipe systems Face-to-face and center-to-face dimensions, MOD
Inspection and test standard	GB/T 13927	Industrial valves - Pressure testing
	ISO 5208:2015	Industrial valves Pressure testing of metallic valves, MOD
	API 598	Valve Inspection and Testing
Material standard	GB/T 12227	General purpose industrial valves Specification of spheroidal graphite iron castings
	GB/T 12229	General purpose industrial valves Specification of carbon steel castings
	GB/T 12230	General purpose industrial valves Specification of stainless steel castings

Multifunctional Check Valve

Main Parts Materials	
Part name	**Material name or code**
Valve body/valve plate	Ductile iron, carbon steel, stainless steel
Stem	Stainless steel, 20Cr3, 304, 316
Diaphragm seat/diaphragm cover/diaphragm pressure plate	Ductile iron, carbon steel, stainless steel
Piston cylinder/piston	Ductile iron, carbon steel, stainless steel
Control line	Stainless steel, copper alloy
Control ball valve or globe valve/filter	Stainless steel, copper alloy
Sealing surface material	Rubber, metal seal, metal composite seal

Installation Type Description

The tilting disc check valve can be installed vertically or horizontally. In order to facilitate installation and maintenance, horizontal installation should be given priority when space permits, and the valve shaft should be ensured to be horizontal.

When the valve is closed, the smooth surface of the valve plate is in the inlet direction, and the surface with the valve shaft and the control cylinder ejector rod is in the outlet direction. Reverse installation is strictly prohibited. The distance from adjacent valves and elbows shall not be less than lDN.

When installing horizontally, in order to improve the stress condition of the pipeline, when the valve diameter is larger than 900 mm, a bracket or foundation can be installed to improve the stress condition of the pipeline.

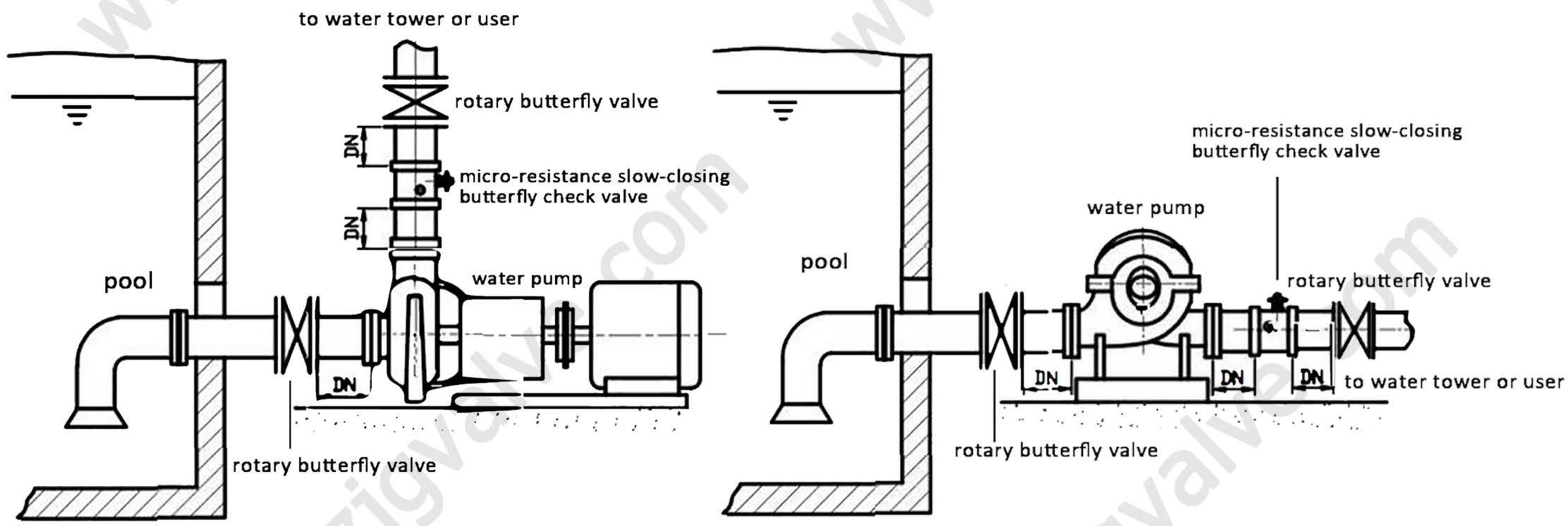

Schematic diagram of vertical and horizontal installation forms

Main External & Connecting Dimensions

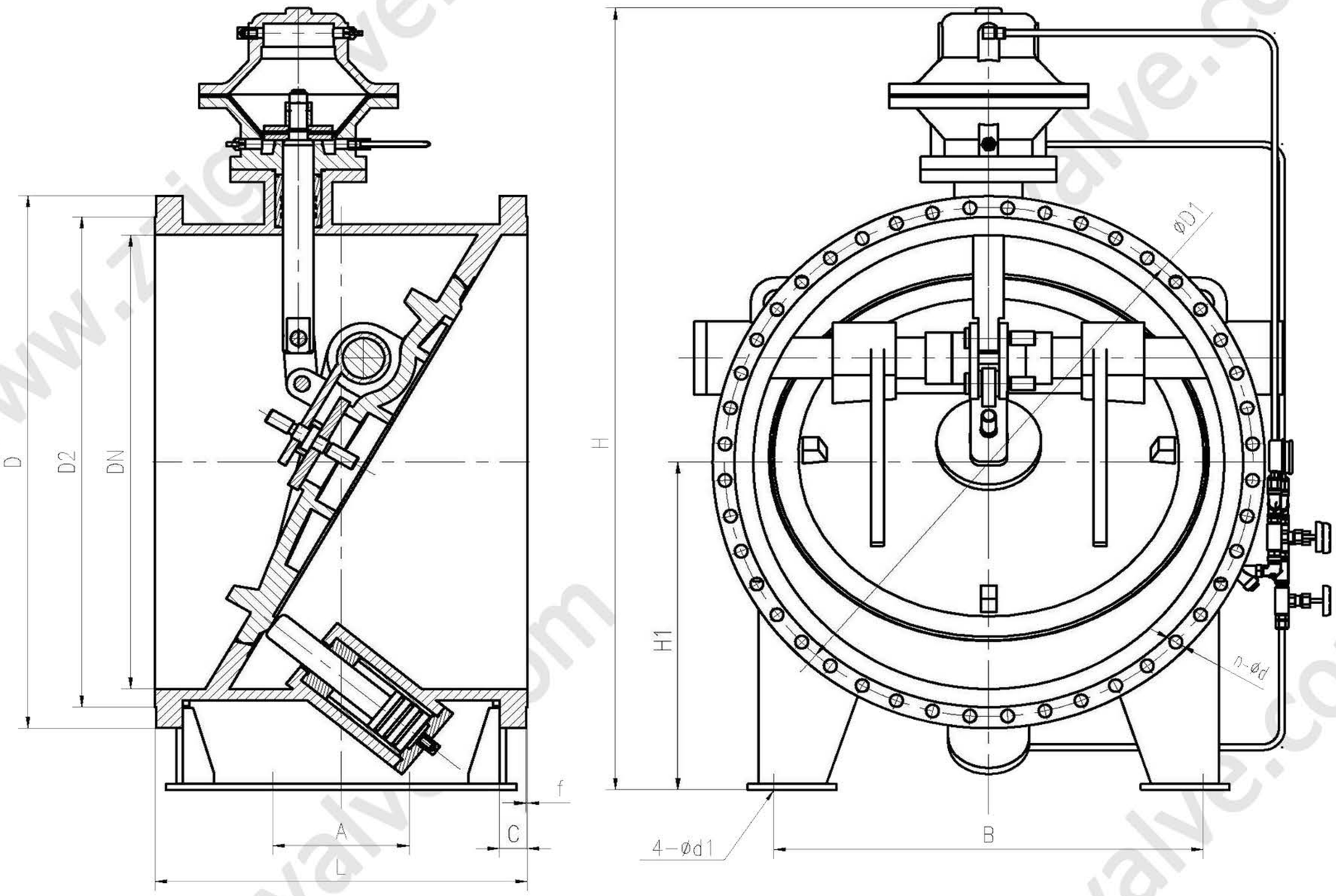

PN=0.6MPa												HG/T 20592-2009
DN	L	D	D1	D2	C	f	n-d	H	H1	A	B	d1
200	190	320	280	258	20	2	8-18	520	/	/	/	/
250	250	375	335	312	22	2	12-18	580	/	/	/	/
300	270	440	395	365	22	2	12-22	710	/	/	/	/
350	290	490	445	415	22	2	12-22	770	/	/	/	/
400	406	540	495	465	22	2	16-22	830	/	/	/	/
450	432	595	550	520	22	2	16-22	870	/	/	/	/
500	457	645	600	570	24	2	20-22	930	/	/	/	/
600	508	755	705	670	30	2	20-26	1090	/	/	/	/
700	610	860	810	775	24	2	24-26	1260	520	220	650	30
800	660	975	920	880	24	2	24-30	1440	630	220	720	33
900	711	1075	1020	980	26	2	24-30	1535	650	300	820	36
1000	811	1175	1120	1080	26	2	28-30	1750	710	350	900	36
1200	850	1405	1340	1295	28	2	32-33	1960	820	410	1070	36
1400	950	1630	1560	1510	32	2	36-36	2250	920	500	1250	36
1600	1100	1830	1760	1710	34	2	40-36	2500	1020	600	1300	36
1800	1200	2045	1970	1920	36	2	44-39	2820	1150	680	1400	36
2000	1300	2265	2180	2125	38	2	48-42	3150	1250	820	1550	48

ZZJG VALVE

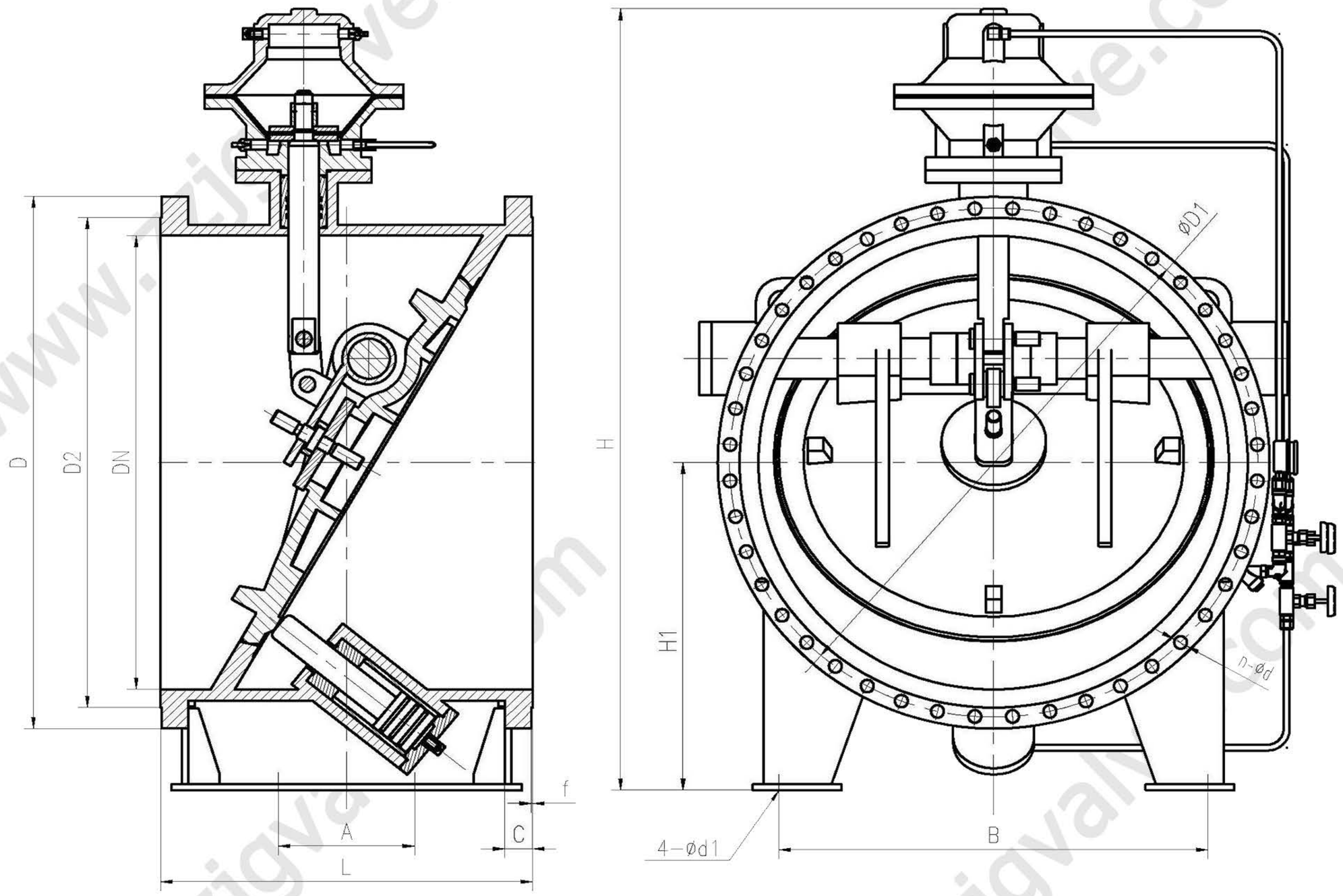

PN=1.0MPa												HG/T 20592-2009
DN	L	D	D1	D2	C	f	n-d	H	H1	A	B	d1
200	190	360	310	278	30	2	12-26	520	/	/	/	/
250	250	425	370	335	32	2	12-30	580	/	/	/	/
300	270	485	430	395	34	2	16-30	710	/	/	/	/
350	290	555	490	450	38	2	16-33	770	/	/	/	/
400	406	620	550	505	40	2	16-36	830	/	/	/	/
450	432	670	600	555	46	2	20-36	870	/	/	/	/
500	457	730	660	615	48	2	20-36	930	/	/	/	/
600	508	845	770	720	58	2	20-39	1090	/	/	/	/
700	610	960	875	820	50	2	24-42	1260	520	220	650	30
800	660	1085	990	930	54	2	24-48	1440	630	220	720	33
900	711	1185	1090	1030	58	2	28-48	1535	650	300	820	36
1000	811	1320	1210	1140	62	2	28-55	1750	710	350	900	36
1200	850	1530	1420	1350	70	2	32-55	1960	820	410	1070	36

Main External & Connecting Dimensions

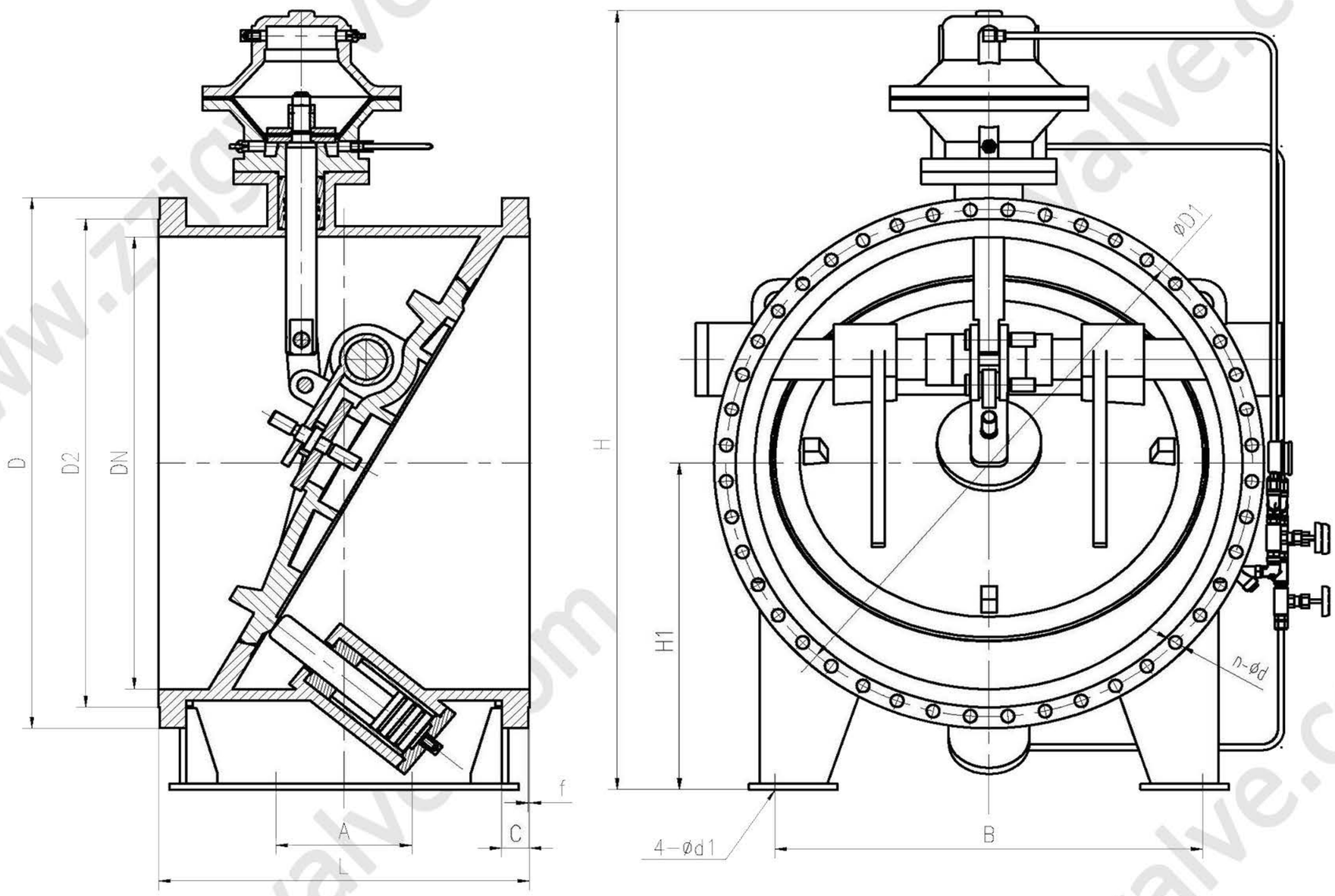

PN=1.6MPa												HG/T 20592-2009
DN	L	D	D1	D2	C	f	n-d	H	H1	A	B	d1
200	190	340	295	268	24	2	12-22	520	/	/	/	/
250	250	405	355	320	26	2	12-26	580	/	/	/	/
300	270	460	410	378	28	2	12-26	710	/	/	/	/
350	290	520	470	428	30	2	16-26	770	/	/	/	/
400	406	580	525	490	32	2	16-30	830	/	/	/	/
450	432	640	585	550	40	2	20-30	870	/	/	/	/
500	457	715	650	610	44	2	20-33	930	/	/	/	/
600	508	840	770	725	54	2	20-36	1090	/	/	/	/
700	610	910	840	795	42	2	24-36	1260	520	220	650	30
800	660	1025	950	900	42	2	24-39	1440	630	220	720	33
900	711	1125	1050	1000	44	2	28-39	1535	650	300	820	36
1000	811	1255	1170	1115	46	2	28-42	1750	710	350	900	36
1200	850	1485	1390	1330	52	2	32-48	1960	820	410	1070	36
1400	950	1685	1590	1530	58	2	36-48	2250	920	500	1250	36
1600	1100	1930	1820	1750	64	2	40-56	2500	1020	600	1300	36
1800	1200	2130	2020	1950	68	2	44-56	2820	1150	680	1400	36
2000	1300	2345	2230	2150	70	2	48-62	3150	1250	820	1550	48

ZZJG VALVE

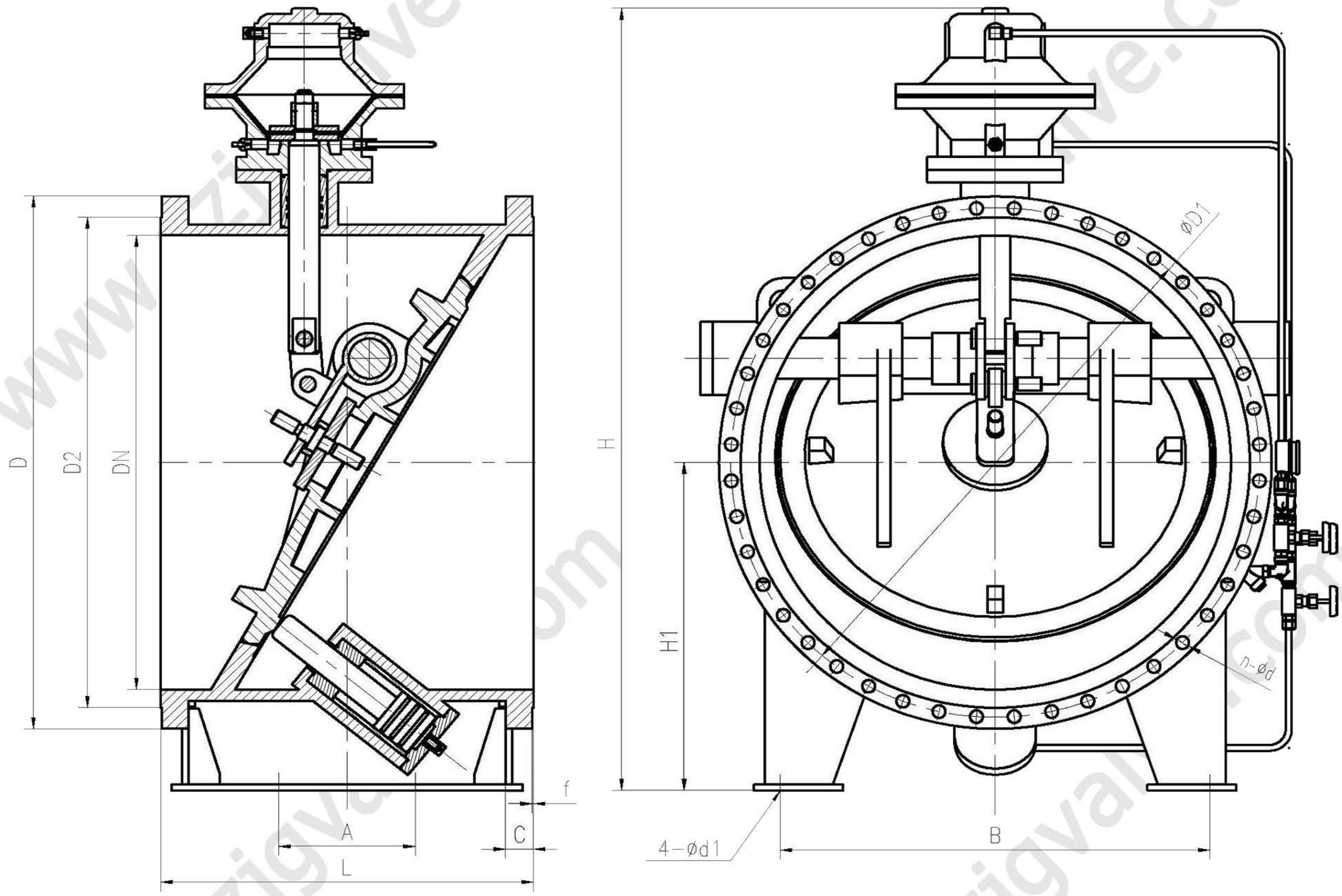

PN=2.5MPa												HG/T 20592-2009
DN	L	D	D1	D2	C	f	n-d	H	H1	A	B	d1
200	190	360	310	278	30	2	12-26	520	/	/	/	/
250	250	425	370	335	32	2	12-30	580	/	/	/	/
300	270	485	430	395	34	2	16-30	710	/	/	/	/
350	290	555	490	450	38	2	16-33	770	/	/	/	/
400	406	620	550	505	40	2	16-36	830	/	/	/	/
450	432	670	600	555	46	2	20-36	870	/	/	/	/
500	457	730	660	615	48	2	20-36	930	/	/	/	/
600	508	845	770	720	58	2	20-39	1090	/	/	/	/
700	610	960	875	820	50	2	24-42	1260	520	220	650	30
800	660	1085	990	930	54	2	24-48	1440	630	220	720	33
900	711	1185	1090	1030	58	2	28-48	1535	650	300	820	36
1000	811	1320	1210	1140	62	2	28-55	1750	710	350	900	36
1200	850	1530	1420	1350	70	2	32-55	1960	820	410	1070	36

Main External & Connecting Dimensions

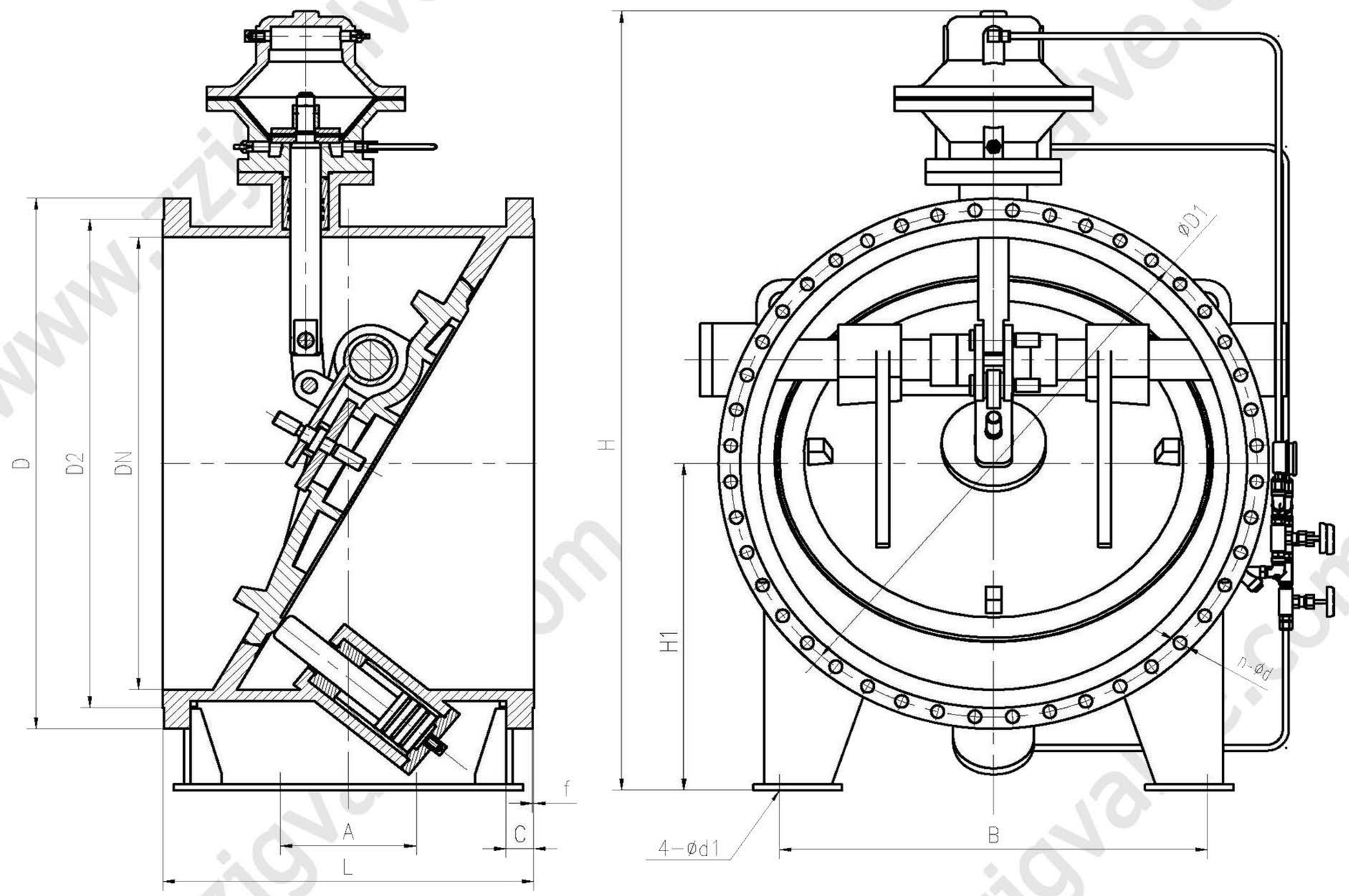

Class150							HG/T 20615-2009, HG/T 20623 2009					
DN	L	D	D1	D2	C	f	n-d	H	H1	A	B	d1
200	190	345	298.5	269.9	29	2	8-22	520	/	/	/	/
250	250	405	362	323.8	30.6	2	12-26	580	/	/	/	/
300	270	485	431.8	381	32.2	2	12-26	710	/	/	/	/
350	290	535	476.3	412.8	35.4	2	12-30	770	/	/	/	/
400	406	595	539.8	469.9	37	2	12-30	830	/	/	/	/
450	432	635	577.9	533.4	40.1	2	16-33	870	/	/	/	/
500	457	700	635	584.2	43.3	2	20-33	930	/	/	/	/
600	508	815	749.3	692.2	48.1	2	20-36	1090	/	/	/	/
700	610	835	795.3	762	45	2	40-22	1260	520	220	650	30
800	660	940	900.1	864	46.6	2	48-22	1440	630	220	720	33
900	711	1055	1010	972	52.9	2	44-26	1535	650	300	820	36
1000	811	1175	1121	1080	56.1	2	44-30	1750	710	350	900	36
1200	850	1390	1335	1289	65.6	2	44-33	1960	820	410	1070	36
1400	950	1600	1543	1492	73.6	2	60-33	2220	920	500	1250	36

ZZJG VALVE

Flow coefficient & flow resistance coefficient when the valve is fully open

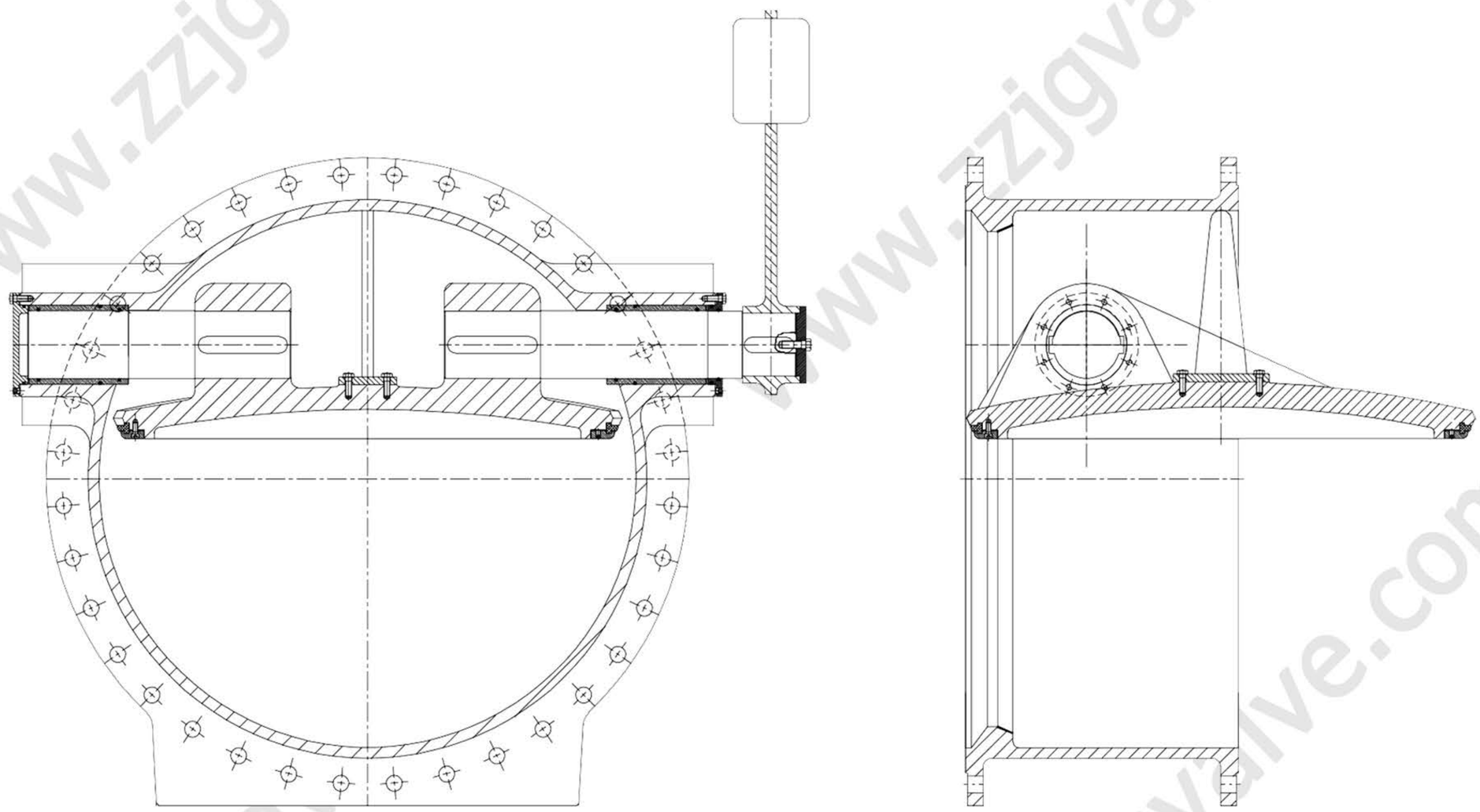

DN（mm）	Kv			K(ζ)		
	PN1.0MPa	PN1.6MPa	PN2.5MPa	PN1.0MPa	PN1.6MPa	PN2.5MPa
250	0.086			0.65		
300	0.13			0.59		
400	0.24			0.51		
500	0.39			0.5		
600	0.58			0.47		
700	0.83			0.43		
800	1.15			0.38		
900	1.5			0.36		
1000	1.9			0.34		
1200	2.83			0.3		
1400	3.97			0.29		
1600	5.37			0.28		
1800	7.19			0.25		
2000	9.1			0.24		

www.zzjgvalve.com

ZZJG VALVE MORE VALUE

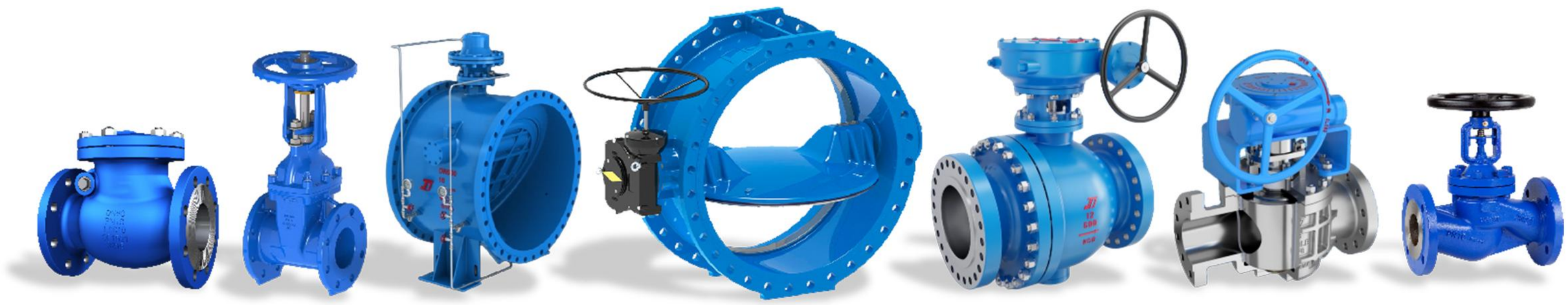

ZHENGZHOU JINGGONG TECHNOLOGY CO., LTD.

Tel: +86-371-55659925

Fax: +86-371-55659926

Email: info@zzjgvalve.com

Web: www.zzjgvalve.com

Address: Chuangye Road, Gaoshan Town, Zhengzhou City, China 450000

All rights reserved by Zhengzhou Jinggong Technology Co., Ltd. The products are protected by patents and legal liability will be pursued for infringement. This sample only introduces some products. If there are any changes without notice, please contact our company to obtain the latest version.