ZZJG VALVE

Double Offset Butterfly Valve

TOTAL SOLUTIONS FOR FLOW SYSTEM

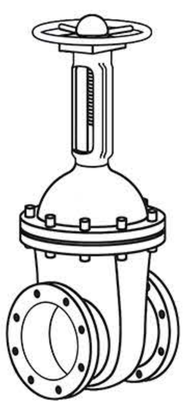
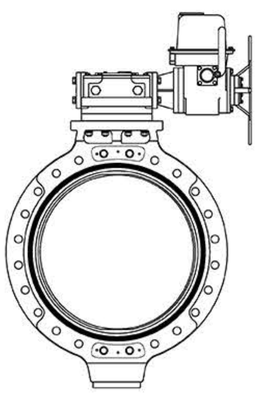
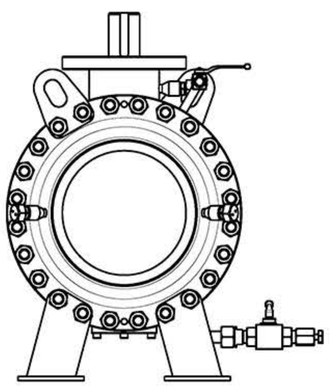
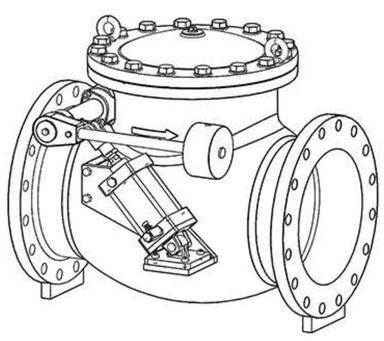
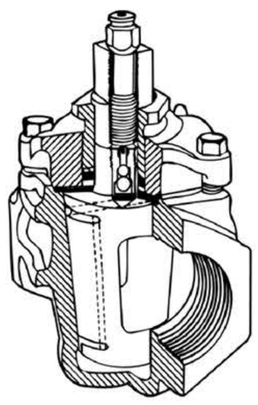
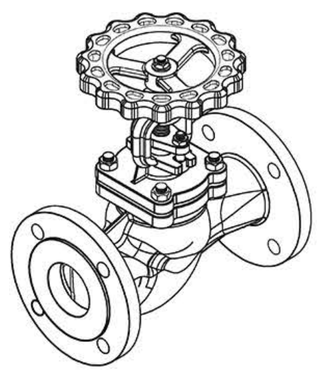

ABOUT US

ZZJG VALVE

ZHENGZHOU JINGGONG TECHNOLOGY CO., LTD is located in "Hometown of Valve in China" Gaoshan Town, Xingyang City, Henan Province. It is a high-tech enterprise in one line of design, manufacturing, sales and services.

Founded in 1981, after more than 40 years of development, it has become a professional valve manufacturer. With 103,180,000 RMB of registered capital, it covers an area of 26,000 ㎡ and owns professional workshops.

Aim: loyal to and customer, optimal management, rigorous and pragmatic and to promote China's valve industry to a higher level and ZZJG brand a leading position.

Certifications: ISO9001 Quality System Certification, ISO14001 Environment System Certification, ISO45001 Occupational Health and Safety Management Certification, TS Special Equipment License, API 609, API 6D, European Union CE Certification, EAC, SGS Certification, WRAS Certification, Utility Model Patent Certificates, etc.

Main products: PN0.25-32MPa, DN50-3000, soft/metal seal butterfly valves, plug valves, ball valves, gate valves, globe valves, check valves, control valves, etc.

Application: Water engineering, Electric power, Petroleum, Chemical industry, Petrochemical industry, Heating, Pharmaceuticals, Metallurgy, etc.

www.zzjgvalve.com

ZZJG VALVE

ZZJG VALVE

ZZJG CASES

The company strictly controls and checks the quality of every link and process. Product design has been incorporated into a set of extremely rigorous and precise procedures; from design, material selection, manufacturing, assembly to operation, every link must undergo rigorous testing procedures, strict control, and high quality, so that customers can use it. At the same time, we deeply feel our rigorous and pragmatic quality purpose.

www.zzjgvalve.com

Double Offset Butterfly Valve

Overview

Double Offset Butterfly Valve's main structure is similar to butterfly valve, with the characteristics of short structure and small size of butterfly valve, so it can manufacture large-caliber, extra-large caliber and super-large caliber valves;

The valve combines the functions and benefits of butterfly valves, half ball valves, gate valves and globe valves, and has its own completely different powerful functions and benefits.

Small size, light weight, convenient transportation, installation, maintenance and repair, reliable operation and a series of advantages, has become a major technological revolution in the valve industry.

Features

It can not only be reliably shut down in the forward pressure, but also reliably shut down in the reverse pressure or the reverse pressure is much greater than the forward pressure

On the two sealing surfaces of the sealing pair, advanced processes such as overlay welding, ether laser sputtering, vacuum protection seepage overlay welding and other advanced processes can be used to form gradient functional materials such as martensitic stainless steel, austenitic stainless steel, cemented carbide, cermet, synthetic diamond and so on

It can automatically align the center, and can automatically cross the range to compensate for wear;

Make full use of the energy of the medium in the valve when closing, and automatically apply extremely high sealing specific pressure, so that the high hard sealing pair can achieve reliable zero leakage.

Instant closing, instant opening, no friction between the sealing pairs.

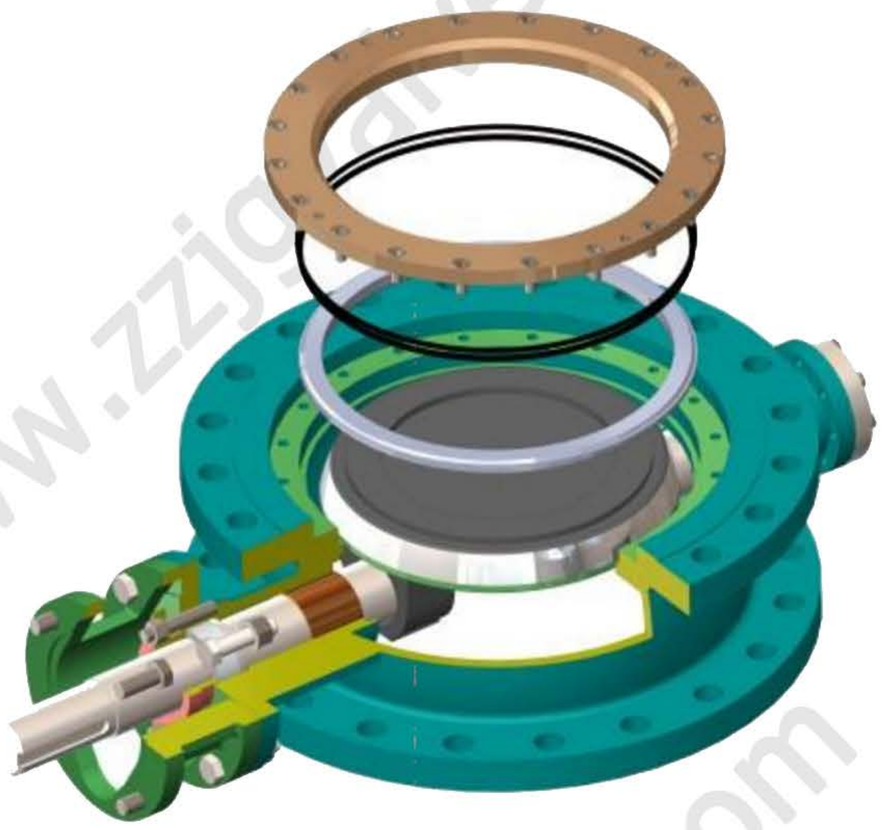

Applications

It is widely used in metallurgy, mining, petrochemical, chemical, electric power, environmental protection, municipal and other industries and departments of pipeline opening and closing, regulation. Applicable medium: water, sewage, oil, etc.

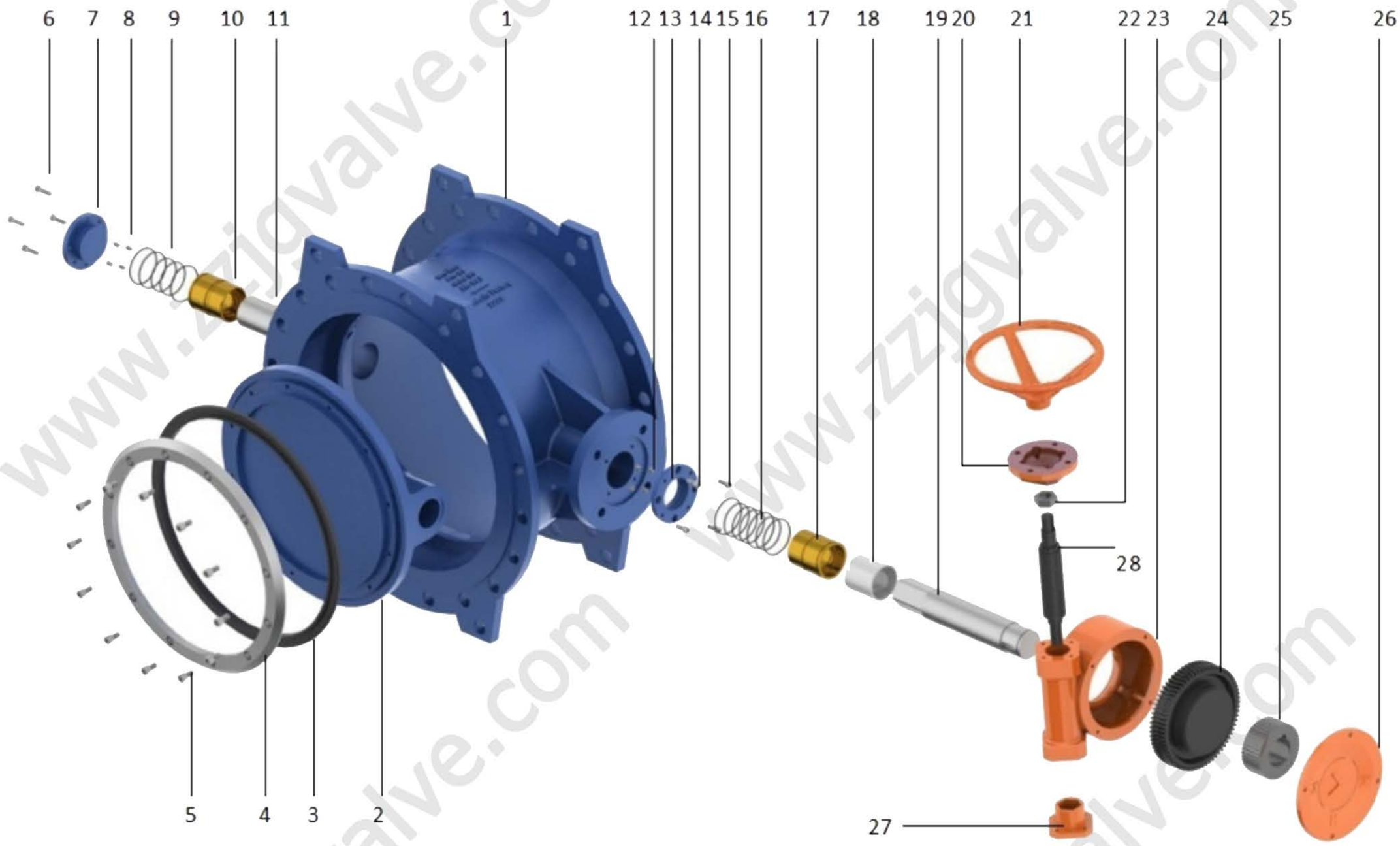

No.	Part	No.	Part	No.	Part	No.	Part
1	Body	8	Bolts	15	Bolts	22	Hexagon Nut
2	Disc	9	Spring	16	Spring	23	Gearbox Body
3	Disc Sealing	10	Bushing	17	Bushing	24	Gear
4	Retaining Ring	11	Lower Shaft	18	Main Shaft Bearing	25	Inner Gear Shaft Connection
5	Retaining Ring Bolts	12	Bolts	19	Main Shaft	26	Gearbox Cover
6	Bolts	13	Main Shaft Cover	20	Gearbox ISO Top Flange	27	Gearbox Shaft Cover
7	Lower Shaft Cover	14	Bolts	21	Hand Wheel	28	Gearbox Shaft

Sealing test 1.1*PN Shell test 1.5*PN

Technical Performance Specifications

Nominal diameter (mm)	Nominal pressure (Mpa)	Test pressure (MPa)		Applicable temperature	Applicable medium
		Shell test	Sealing test		
DN50~3000mm	0.6	0.9	0.66	0~80℃ 0~200℃	clean water sewage oil etc.
	1.0	1.5	1.1		
	1.6	2.4	1.76		
	2.5	3.75	2.76		
	4.0	6.0	4.4		

ZZJG VALVE

Main Design & Manufacturing Standards		
Standard content	**Standard**	**Standard name**
Flange standard	GB/T 9113	Integral steel pipe flanges (PN designated)
	GB/T 17241.6	Integral cast iron flanges (PN designated)
	HG/T 20592	Steel pipe flanges (PN designated)
	HG/T 20615	Steel pipe flanges (Class designated)
	HG/T 20623	Large diameter steel pipe flanges (Class designated)
	ASME B16.47	Large Diameter Steel Flanges NPS 26 Through NPS 60 Metric /Inch Standard
	ASME B16.5	Pipe Flanges and Flanged Fittings NPS 1/2 Through NPS 24 Metric/Inch Standard
Structure length standard	GB/T 12221	Metal valves - Face to face, end to end, center toface and center to end dimensions
	ISO 5752:1982	Metal valves for use in flanged pipe systems Face-to-face and center-to-face dimensions, MOD
	API 609	Butterfly Valves: Double-flanged, Lugand Wafer-type, and Butt-welding Ends
Pressure test standard	GB/T 13927	Industrial valves - Pressure testing
	ISO 5208:2015	Industrial valves - Pressure testing of metallic valves, MOD
	API 598	Valve Inspection and Testing
Structural design standard	GB/ T 26146	General valve - Eccentric semi-ball valve
	GB/T 12238	General valves - Flange and wafer connection butterfly valves
Use material standard	GB/T 12226	General purpose industrial valves - Specification of flake graphite iron castings
	GB/T 12227	General purpose industrial valves - Specification of spheroidal graphite iron castings
	GB/T 12229	General purpose industrial valves - Specification of carbon steel castings
	GB/T 12230	General purpose industrial valves - Specification of stainless steel castings
	ASTM A351	Standard Specification for Castings, Austenitic, for Pressure-Containing Parts
	ASTM A216	Standard Specification for Steel Castings, Carbon, Suitable for Fusion Welding, for High-Temperature Service

Operation

Main types: The main types of this valve include manual, worm gear, electric, pneumatic, and hydraulic. Among them, pneumatic valves and hydraulic valves are suitable for pressure air and pressure liquid sources.

Working Principle

The valve seat adopts the DBB (single piston effect) sealing principle, the sealing surface of the spool is a cubic curved surface, and the sealing surface of the valve seat is a primary conical surface. At the sealing point, the seat face is actually a slice of the cubic surface of the spool, so the combination is perfect.

It has the function of adapting (automatic positioning and overlapping of the center) and compensating for wear, because the center of rotation deviates from the geometric center of the spool, there is the actual effect of the spool entity constantly retreating and shrinking inward when the spool is opened, and the spool entity continues to advance and expands outward when the spool is closed, and its function is equivalent to the synthesis of hemispherical valves, gate valves, globe valves, and butterfly valves.

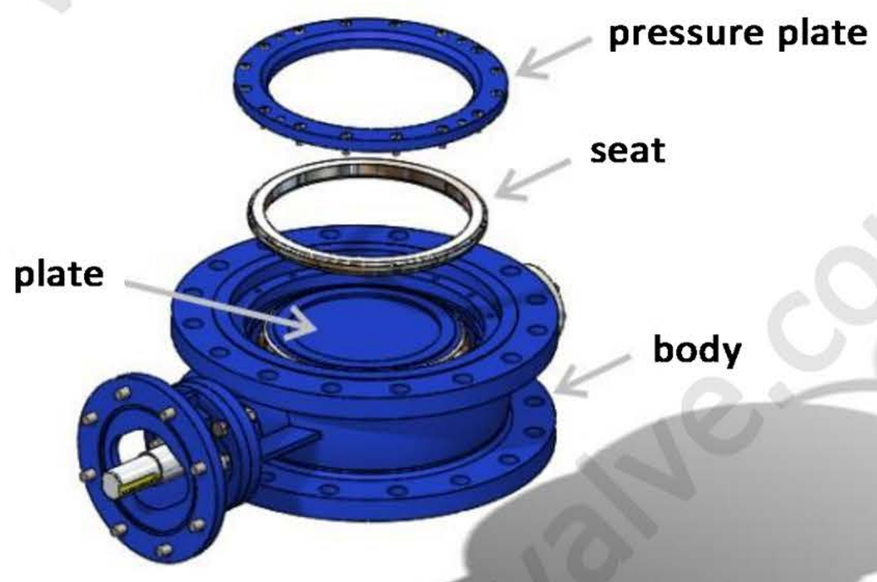

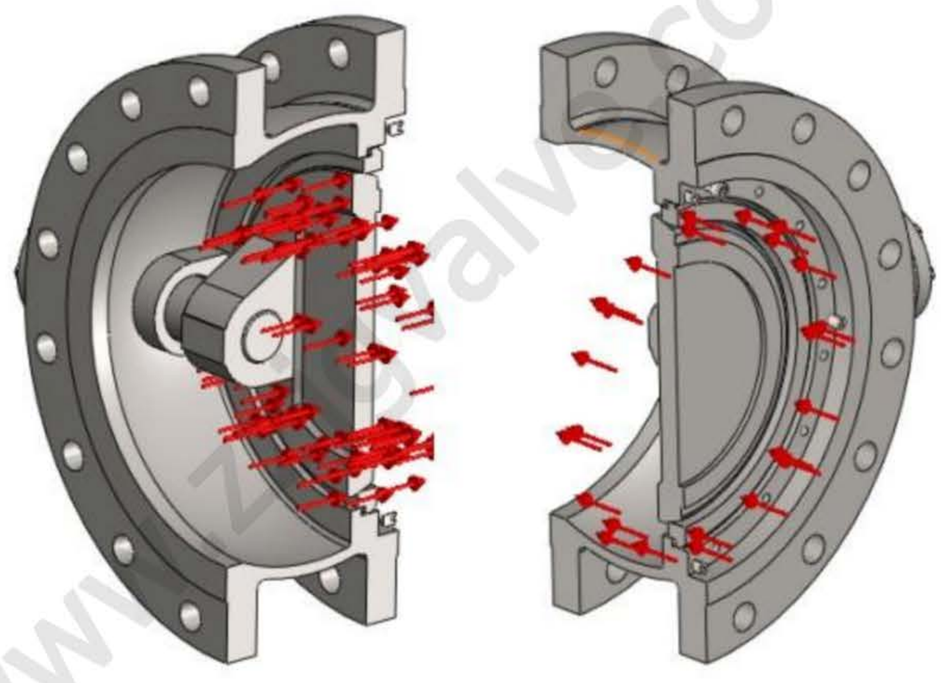

ZZJG VALVE

The main function of the bidirectional flow valve is to seal well both at forward pressure and when reverse pressure or reverse pressure is greater than forward pressure.

When the forward pressure acts, the medium pressure pushes the valve plate to move forward, the valve stem is deformed, and the sealing surface of the valve plate transmits pressure close to the sealing surface of the valve seat, and pushes the valve seat to the valve body step to make it dense and good.

When the reverse pressure acts, the medium pressure pushes the valve plate to move backwards, the valve stem is deformed, and the medium pressure simultaneously pushes the valve seat sealing surface to close to the valve plate sealing surface to transmit pressure, and pushes the valve seat to the valve plate deformation position to make it sealed well.

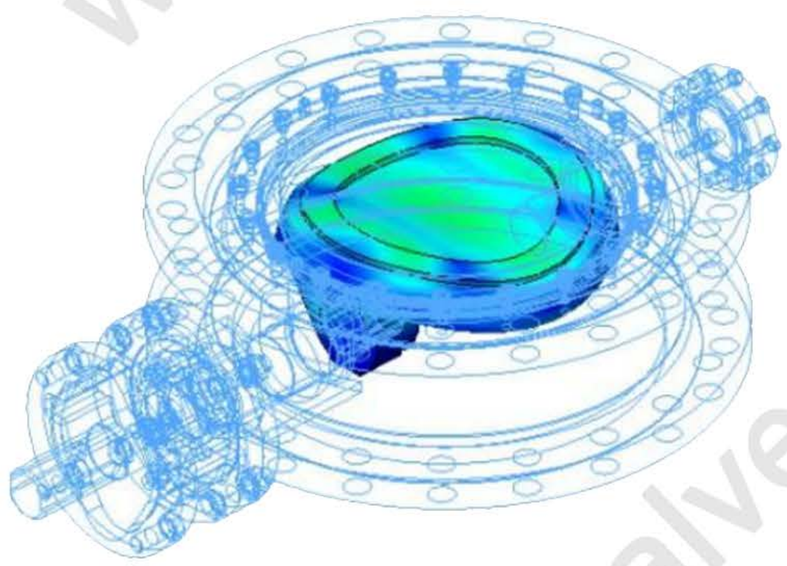

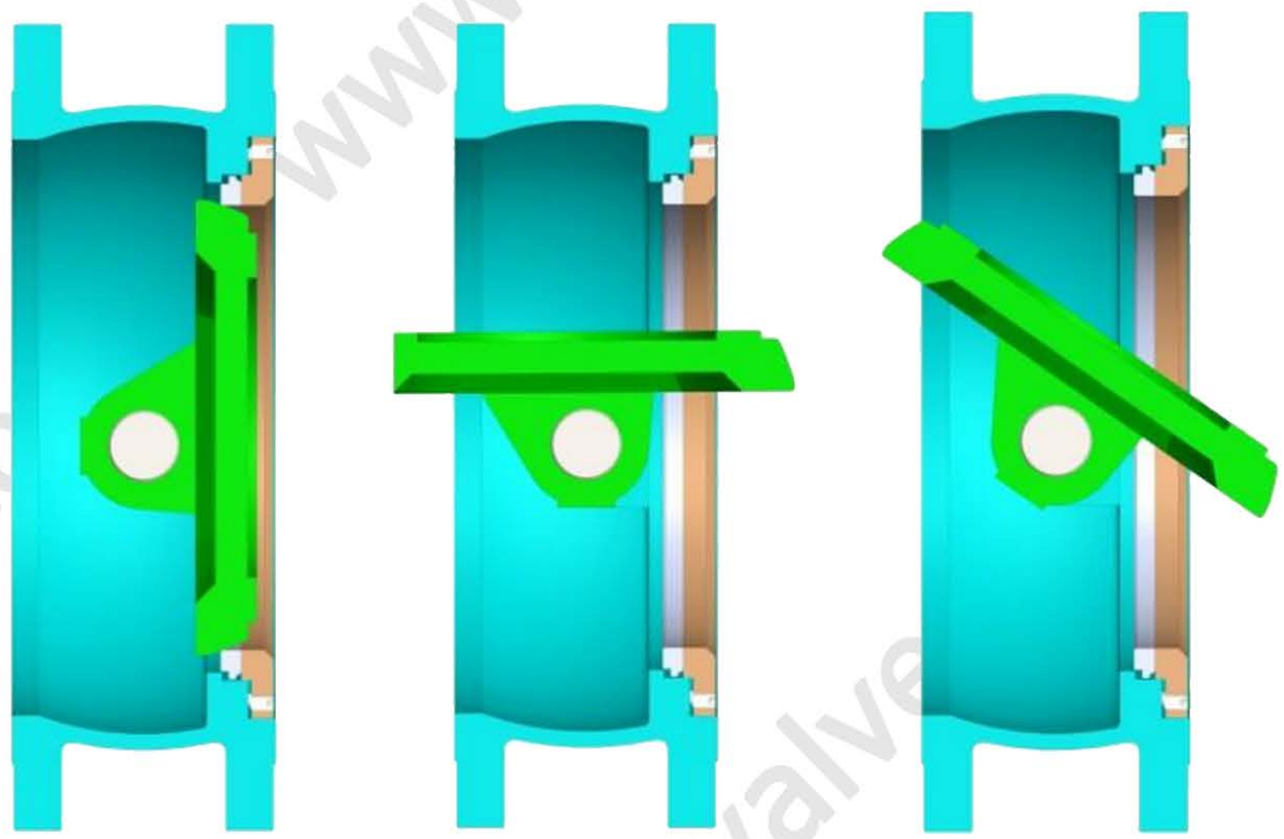

changes in different angles of valve opening

www.zzjgvalve.com

Double offset butterfly valve Dimensions (＜80℃)

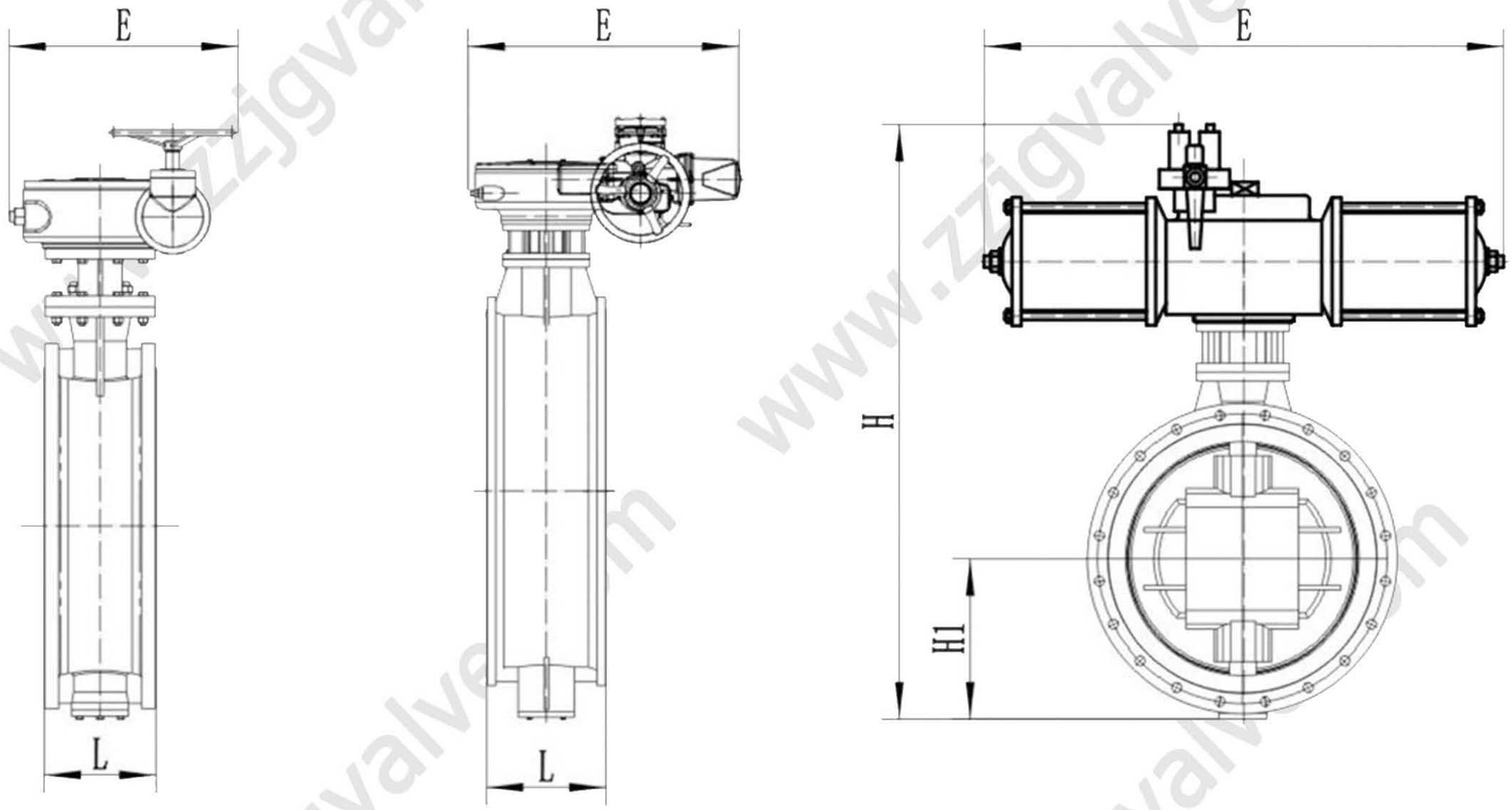

High temperature double offset butterfly valve dimensions (＜425℃)

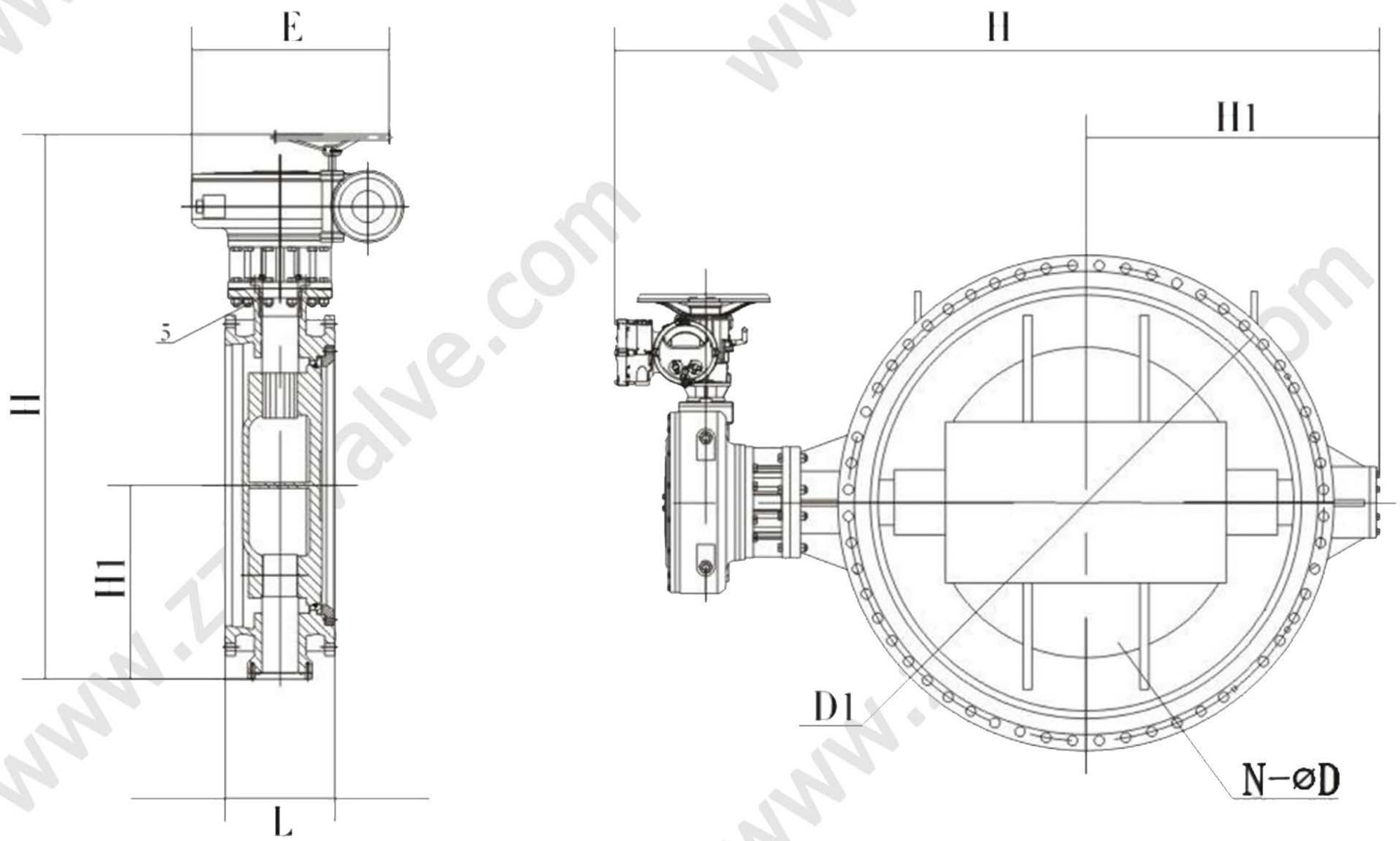

ZZJG VALVE

Double Offset Butterfly Valve

DN	L	H1	E			H		
			Worm gear	pneumatic	electric	Worm gear	pneumatic	electric
100	127	150	200	355	255	420	675	600
125	140	170	200	355	255	460	715	640
150	140	210	280	355	315	550	800	705
200	152	245	425	250	315	760	850	775
250	165	276	425	250	315	830	925	945
300	178	280	560	450	315	895	1035	1070
350	190	325	560	450	315	950	1070	1140
400	216	345	580	450	315	1190	1190	1210
450	222	390	580	650	714	1255	1250	1335
500	229	442	580	650	714	1305	1290	1415
600	267	505	660	850	810	1340	1455	1605
700	292	550	550	850	810	1520	1585	1844
800	318	605	550	1250	810	1710	1700	2040
900	330	665	550	1250	863	1810	1965	2255
1000	410	710	750	1250	863	1960	2015	2380
1200	470	835	925	12S0	863	2250	250	2640
1400	530	935	925	1250	1055	2434	2550	2866
1600	600	1060	925	1250	1055	2780	2750	3156
1800	670	1175	980	1250	1183	3020	2950	3421
2000	760	1265	980	1500	1286	3270	3350	3685

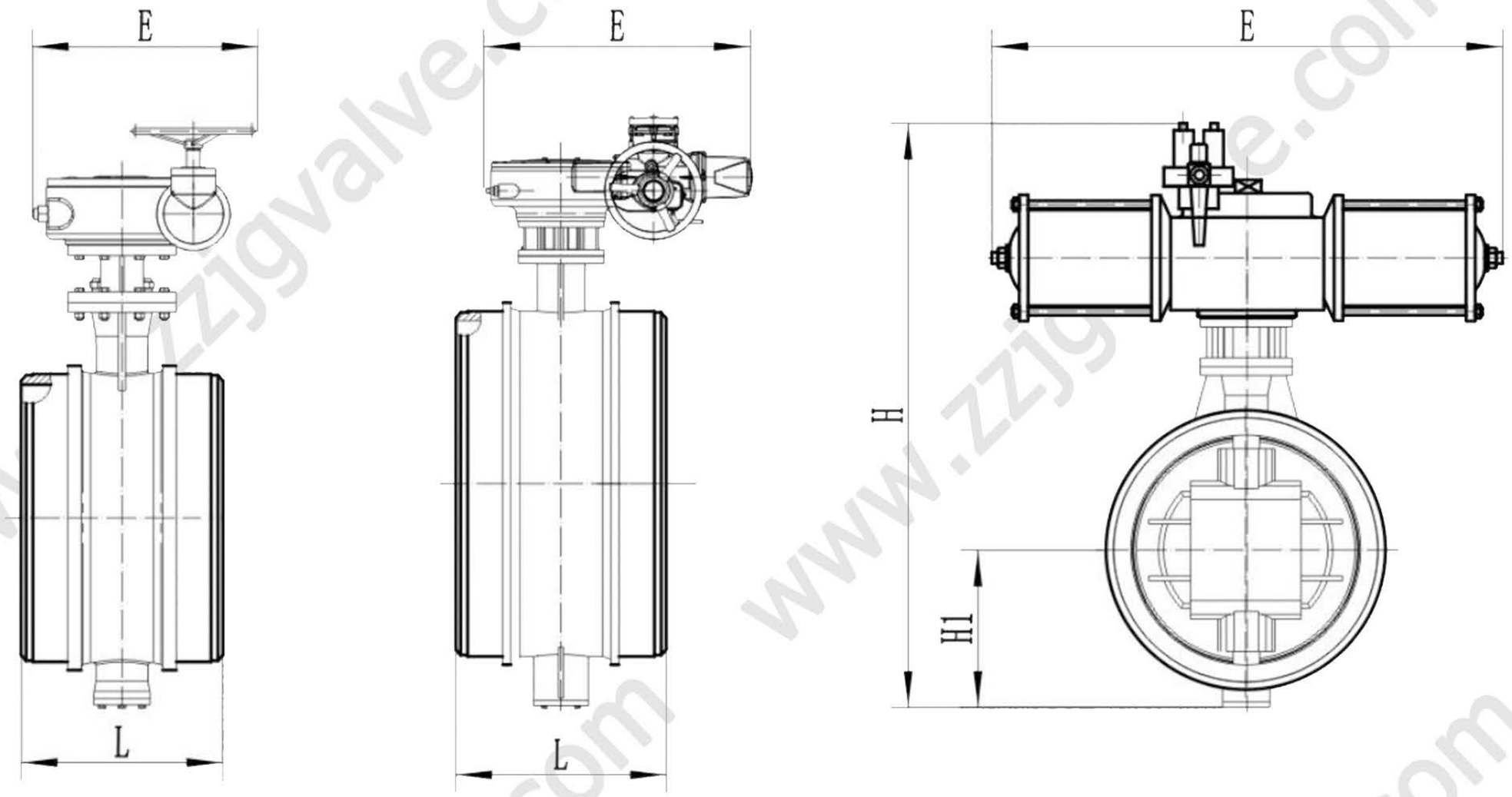

Main Dimensions of Welded Double Offset Butterfly Valve						
Nominal diameter (mm)		L	H1	H		
DN	NPS	PN6/PN10/PN16/PN25/PN40 CLass150/CLass300		Worm gear	pneumatic	electric
100	4	190	120	376	630	555
125	5	200	130	386	640	565
150	6	210	140	452	696	602
200	8	230	180	530	740	650
250	10	250	230	620	790	740
300	12	270	240	698	838	850
350	14	290	270	778	900	970
400	16	310	300	846	930	1010
450	18	330	340	1005	998	1082
500	20	350	360	1058	1045	1175
600	24	390	410	1195	1235	1410
700	28	430	510	1308	1390	1650
800	32	470	560	1505	1500	1830
900	36	510	620	1650	1810	2240
1000	40	550	670	1718	1860	2320
1200	48	630	780	2015	-	2406
1400	56	710	880	2265	-	2660
1600	64	790	1020	2547	-	2895

ZZJG VALVE

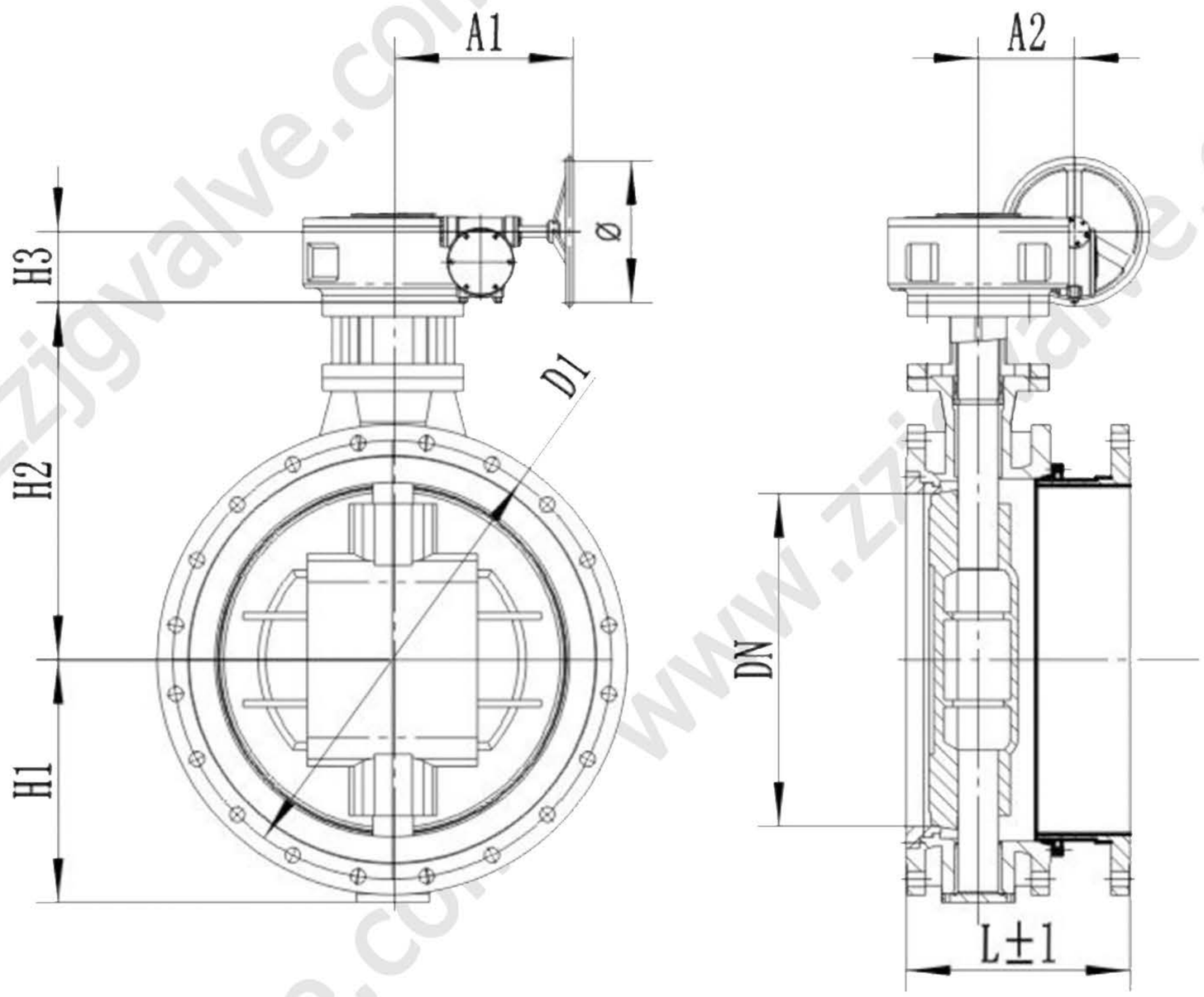

DQ342H-2.5/6/10/16 Flange Telescopic Double Offset Butterfly Valve Connection Dimensions																
DN	L	move	HI	H2	H3	A1	A2	Φ	0.25MPa		0.6MPa		1.0MPa		1.6MPa	
		ΔL							D1	n-d	D1	n-d	D1	n-d	D1	n-d
50	150	±10	82.5	150	66	135	42	150	110	4-Φ14	110	4-Φ14	125	4-Φ19	125	4-Φ19
65	170	±10	92.5	165	66	135	42	150	130	4-Φ14	130	4-Φ14	145	4-Φ19	145	4-Φ19
80	180	±10	100	170	66	135	42	150	150	4-Φ19	150	4-Φ19	160	8-Φ19	160	8-Φ19
100	190	±10	125	195	11	135	42	180	170	4-Φ19	170	4-Φ19	180	8-Φ19	180	8-Φ19
125	200	±10	142	220	77	135	42	180	200	8-Φ19	200	8-Φ19	210	8-Φ19	210	8-Φ19
150	210	±10	160	250	77	135	42	320	225	8-Φ19	225	8-Φ19	240	8-Φ23	240	8-Φ23
200	230	±12	190	275	107	202	60	320	280	8-Φ19	280	8-Φ19	295	8-Φ23	295	12-Φ23
250	250	±12	220	305	107	202	60	320	335	12-Φ19	335	12-Φ19	350	12-Φ23	355	12-Φ28
300	270	±15	245	350	126	220	93	320	395	12-Φ23	395	12-Φ23	400	12-Φ23	410	12-Φ28
350	290	±15	278	385	126	220	93	320	445	12-Φ23	445	12-Φ23	460	16-Φ23	470	16-Φ28
400	310	±15	305	435	157	287	123	400	495	16-Φ23	495	16-Φ23	515	16-Φ28	525	16-Φ31
450	330	±15	346	490	157	287	123	400	550	16-Φ23	550	15-Φ23	565	20-Φ28	585	20-Φ31
500	350	±20	375	505	165	360	184	390	600	20-Φ23	600	20-Φ23	620	20-Φ28	650	20-Φ34
600	390	±20	425	605	165	360	184	390	705	20-Φ26	705	20-Φ26	725	20-Φ31	770	20-Φ37
700	430	±20	495	675	195	410	204	500	810	24-Φ26	810	2-Φ26	840	24-Φ31	840	24-Φ37
800	470	±30	560	740	195	410	204	500	920	24-Φ31	920	24-Φ31	950	24-Φ34	950	24-Φ40
900	510	±30	625	805	235	521	217	500	1020	24-Φ31	1020	24-Φ31	1050	28-Φ34	1050	28-Φ40
1000	550	±30	680	865	235	521	217	500	1120	28-Φ31	1120	28-Φ31	1160	28-Φ37	1170	28-Φ43
1200	630	±35	800	1065	251	501	290	630	1320	32-Φ31	1340	32-Φ34	1380	32-Φ40	1390	32-Φ49
1400	710	±35	920	1207	343	656	312	800	1520	36-Φ31	1560	36-Φ37	1590	36-Φ43	1590	36-Φ49
1600	790	±40	1030	1317	370	750	414	800	1730	40-Φ31	1760	40-Φ37	1820	40-Φ49	1820	40-Φ56
1800	870	±40	1245	1457	470	800	440	900	1930	44-Φ31	1970	44-Φ40	2020	44-Φ48	2020	44-Φ56
2000	950	±50	1290	1625	470	800	440	900	2130	48-Φ30	2180	48-Φ43	2230	48-Φ48	2230	48-Φ62
2200	1000	±50	1450	1740	470	800	440	900	2340	52-Φ33	2390	52-Φ43	2440	52-Φ56	2440	52-Φ62
2400	1100	±50	1675	1875	480	990	595	1000	2540	56-Φ33	2600	56-Φ43	2650	56-Φ56	2650	56-Φ62
2600	1200	±50	1745	2010	480	990	595	1000	2740	60-Φ33	2810	60-Φ48	2850	60-Φ55	2850	60-d62
2800	1300	±50	1818	2100	480	990	595	1000	2950	64-Φ36	3020	64-Φ48	3070	64-Φ56	3070	64-Φ70
3000	1400	±50	1910	2200	480	990	595	1000	3160	68-Φ36	3220	68-Φ48	3290	68-Φ62	3300	68-Φ70

ZZJG VALVE MORE VALUE

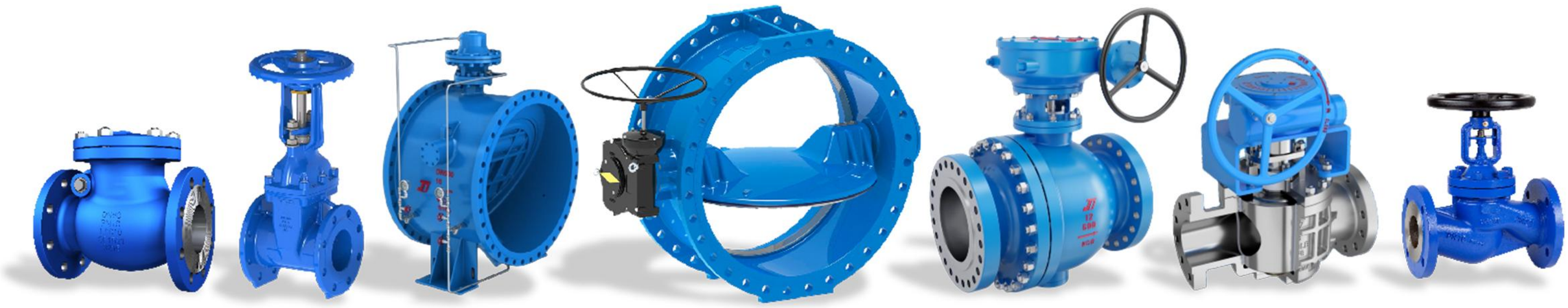

ZHENGZHOU JINGGONG TECHNOLOGY CO., LTD.

Tel: +86-371-55659925

Fax: +86-371-55659926

Email: info@zzjgvalve.com

Web: www.zzjgvalve.com

Address: Chuangye Road, Gaoshan Town, Zhengzhou City, China 450000

All rights reserved by Zhengzhou Jinggong Technology Co., Ltd. The products are protected by patents and legal liability will be pursued for infringement. This sample only introduces some products. If there are any changes without notice, please contact our company to obtain the latest version.